D265579

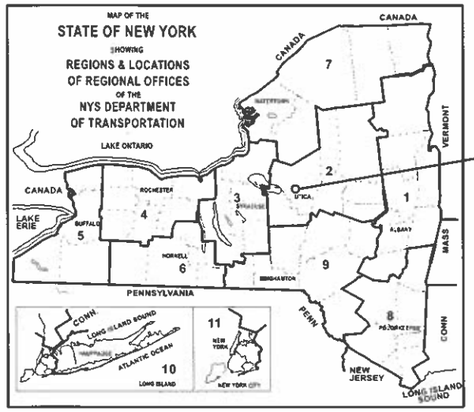

PROJECT LOCATION
CITY OF ROME
ONEIDA COUNTY N.Y.

NEW YORK STATE | Department of Transportation

THE LATEST REVISIONS OF THE STANDARD SHEETS MAINTAINED BY THE DEPARTMENT, WHICH ARE CURRENT AS OF THE STANDARD SPECIFICATIONS ADOPTION DATE SHOWN ON THE PROPOSAL COVER, SHALL BE CONSIDERED TO BE IN EFFECT. ALL PAY ITEMS AND WORK CONTAINED IN THE CONTRACT AND ANY ADDITIONAL PAY ITEMS AND WORK ENCOUNTERED DURING THE COURSE OF THE CONTRACT SHALL BE SUBJECT TO THE APPLICABLE STANDARD SHEET(S) UNLESS OTHERWISE SPECIFIED IN THE CONTRACT DOCUMENTS.

ALL WORK CONTEMPLATED UNDER THIS CONTRACT IS TO BE COVERED BY AND IN CONFORMITY WITH THE STANDARD SPECIFICATIONS (US CUSTOMARY) REFERENCED IN THE CONTRACT PROJECT "PROPOSAL" EXCEPT AS MODIFIED BY THESE PLANS OR BY CHANGES SET FORTH IN THE CONTRACT PROJECT "PROPOSAL."

CONTRACT PLANS HAVE BEEN DESIGNED IN ACCORDANCE WITH NYSDOT POLICIES AND GUIDELINES AND THE FINAL DESIGN REPORT APPROVED ON 6/3/2025

ROUTE 46/WRIGHT SETTLEMENT RD. INTERSECTION IMPROVEMENT PROJECT
NYS RTE. 46 S.H. 9383

THIS PROJECT WILL IMPROVE THE INTERSECTIONS OF
ROUTE 46 (BLACK RIVER BLVD.), WRIGHT SETTLEMENT AND MADISON ST. AND NORTH JAMES ST
CITY OF ROME
ONEIDA COUNTY

FEDERAL AID PROJECT

CONTRACT D265579 ONEIDA COUNTY

TRAFFIC VOLUMES		
ROUTE	AADT	H.V.%
RM 46-2602-3006 +150 FT. TO RM 46-2602-3009 +80 FT.	11368	4.0%
WRIGHT SETTLEMENT ROAD	2922	2.0%
N. MADISION STREET	2909	2.0%
N. JAMES STREET	1390	3.0%

CONTRACTOR'S NAME _____
AWARD DATE _____
COMPLETION DATE _____
FINAL ACCEPTANCE DATE _____
REGIONAL DIRECTOR _____
ENGINEER IN CHARGE _____
FINAL COST TOTAL _____
FISCAL SHARE COST(S)

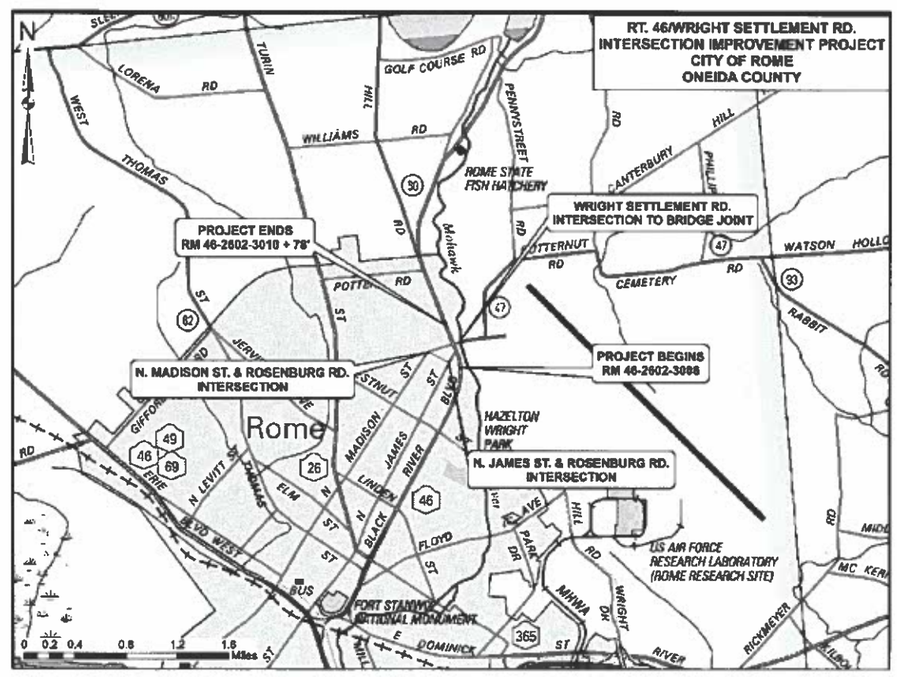

PROJECT LOCATION

ROUTE 46 FROM RM 46-2602-3006 TO 46-2602-3010 +78 FT

QUALITY CONTROLLED BY
8/26/25
DATE

CITY OF ROME: BLACK RIVER BLVD. ARTERIAL		
RTE. 46 - S.H. 9383		
RTE 46		
COUNTY: ONEIDA		
FED. ROAD REG. NO.	STATE	SHEET NO.
1	N.Y.	1
CAPITAL PROJECT IDENTIFICATION NO. 2806.52		

INDEX ON SHEET NO. 2

RECOMMENDED BY
8/26/25
REGIONAL DESIGN ENGINEER DATE
BRIAN HOFFMANN P.E.

RECOMMENDED BY
8/27/25
REGIONAL CONSTRUCTION ENGINEER DATE
CHRIS L. LANGETT P.E.

RECOMMENDED BY
8/26/25
REGIONAL DIRECTOR OF OPERATIONS DATE
MICHAEL PAWLOSKI P.E.

RECOMMENDED BY
8/28/2025
REGIONAL TRAFFIC ENGINEER DATE
MICHAEL GALLERANI P.E.

APPROVED BY
9/9/25
REGIONAL DIRECTOR DATE
LINDA LUBEY P.E.

D265579

DESIGN SUPERVISOR DAVID P. FACCHINI JOB MANAGER THOMAS N. RASTANI JR. DESIGN RYAN FITZGERALD CHECK ROBERT SPARACINO DRAFTING ADAM P. KLOSNER CHECK ROBERT SPARACINO PROJECT MANAGER THOMAS N. RASTANI JR.

FILE NAME = 2806.52_CPH_CVR.dgn
DATE/TIME = 31-JUL-2025 14:01
USER = rsparacino

D265579

ALIGNMENT

ABBR.	DESCRIPTION
AH	AHEAD
AZ	AZIMUTH
BK	BACK
£	BASELINE
BRG	BEARING
¡	CENTERLINE
CS	CURVE TO SPIRAL
e	SUPERELEVATION RATE (CROSS SLOPE)
EQ	EQUALITY
EXT	EXTERNAL
HCL	HORIZONTAL CONTROL LINE
HSD	HEADLIGHT SIGHT DISTANCE
L	LENGTH OF CIRCULAR CURVE
LS	LENGTH OF SPIRAL
LVC	LENGTH OF VERTICAL CURVE
E	CENTER CORRECTION OF VERTICAL CURVE
§	MAIN LINE
PC	POINT OF CURVATURE
PI	POINT OF INTERSECTION
POL	POINT ON LINE
PSD	PASSING SIGHT DISTANCE
PT	POINT OF TANGENT
PVC	POINT OF VERTICAL CURVE
PVI	POINT OF VERTICAL INTERSECTION
PVT	POINT OF VERTICAL TANGENT
R	RADIUS
SC	SPIRAL TO CURVE
SSD	STOPPING SIGHT DISTANCE
ST	SPIRAL TO TANGENT
STA	STATION
T	TANGENT LENGTH
TGL	THEORETICAL GRADE LINE
TS	TANGENT TO SPIRAL
VC	VERTICAL CURVE

TOPOGRAPHY (DRAINAGE)

ABBR.	DESCRIPTION
BB	BOTTOM OF BANK (STREAM)
BC	BOTTOM OF CURB
BO	BOTTOM OF OPENING
CAP	CORRUGATED ALUMINUM PIPE
CB	CATCH BASIN
CIP	CAST IRON PIPE
¡ STRM	CENTERLINE OF STREAM
CMP	CORRUGATED METAL PIPE
CP	CONCRETE PIPE
CSP	CORRUGATED STEEL PIPE
CULV	CULVERT
DIA	DIAMETER
DMH	DRAINAGE MANHOLE
DS	DRAINAGE STRUCTURE PIPE
D'XING	DITCH CROSSING
EHW	EXTREME HIGH WATER
EL	ELEVATION
ELEV	ELEVATION
ELW	EXTREME LOW WATER
ES	END SECTION
HW	HEADWALL
INV	INVERT
MH	MANHOLE
MHW	MEAN HIGH WATER
OHW	ORDINARY HIGH WATER
OLW	ORDINARY LOW WATER
RCP	REINFORCED CONCRETE PIPE
SICPP	SMOOTH INTERIOR CORRUGATED POLYETHYLENE PIPE
TB	TOP OF BANK (STREAM)
TC	TOP OF CURB
TG	TOP OF GRATE
VCP	VITRIFIED CLAY PIPE

TOPOGRAPHY (MISCELLANEOUS)

ABBR.	DESCRIPTION
ABUT	ABUTMENT
AOBE	AS ORDERED BY ENGINEER
ASPH	ASPHALT
BDY	BOUNDARY
BLDG	BUILDING
BM	BENCH MARK
CC	CENTER TO CENTER
CONC	CONCRETE
CONST	CONSTRUCTION
CR	COUNTY ROAD
D	DEED DISTANCE
DM	DIRECT MEASUREMENT
DWY	DRIVEWAY
EP	EDGE OF PAVEMENT
ES	EDGE OF SHOULDER
FEE	FEE ACQUISITION
FEE WO/A	FEE ACQUISITION WITHOUT ACCESS
FP	FENCE POST
FD	FOUNDATION
FL	FENCE LINE
GAR	GARAGE
GR	GRAVEL
HO	HOUSE
HWY	HIGHWAY
IP	IRON PIN OR IRON PIPE
MB	MAILBOX
MON	MONUMENT
N&W	NAIL AND WASHER
OG	ORIGINAL GROUND
O/H	OVERHEAD
P	PARCEL
PAV'T	PAVEMENT
PE	PERMANENT EASEMENT
PED POLE	PEDESTRIAN POLE
¢	PROPERTY LINE
POR	PORCH
RR	RAILROAD
RTE	ROUTE
ROW	RIGHT OF WAY
RW	RETAINING WALL
SH	STATE HIGHWAY
SHLDR	SHOULDER
SPK	SPIKE
ST	STREET
STK	STAKE
STY	STORY
SW	SIDEWALK
TE	TEMPORARY EASEMENT
TO	TEMPORARY OCCUPANCY
U/G	UNDERGROUND
WW	WING WALL

UTILITIES

ABBR.	DESCRIPTION
E	ELECTRIC
EMH	ELECTRIC MANHOLE
G	GAS
GP	GUY POLE
GSB	GAS SERVICE BOX (HOUSE LINE)
GV	GAS VALVE (MAIN LINE)
HYD	HYDRANT
LP	LIGHT POLE
LPG	LOW PRESSURE GAS
PP	POWER POLE
SA	SANITARY SEWER
SMH	SANITARY MANHOLE
ST	STORM SEWER
T	TELEPHONE
TCB	TRAFFIC CONTROL BOX
TELBOX	TELEPHONE BOX
TEL P	TELEPHONE POLE
TMH	TELEPHONE MANHOLE
CTV	CABLE TELEVISION
W	WATER
WSB	WATER SERVICE BOX (HOUSE LINE)
WV	WATER VALVE (MAIN LINE)

SUBSURFACE EXPLORATION

ABBR.	DESCRIPTION
REPLACE ABBREVIATION "AB" WITH:	
AH	HAND AUGER
CP	CONE PENETROMETER
DA	2, INCHES CASED DRILL HOLE
DM	DRILLING MUD
DN	4 INCHES CASED DRILL HOLE
FH	HOLLOW FLIGHT AUGER
PA	POWER AUGER
PH	PROBE
PT	PERCOLATION TEST HOLE
RP	1 INCH SAMPLER (RETRACTABLE PLUG)
	TO BE DEFINED AT THE TIME OF EXPLORATION
SP	SEISMIC POINT
TP	TEST PIT
ABBREVIATION "C" IN CATEGORIES: DA, DM, DN, AND FH WITH:	
B	BRIDGE
C	CUT
D	DAM
F	FILL
K	CULVERT
W	WALL
X	TO BE USED IF ONE OF THE ABOVE CANNOT BE DEFINED AT THE TIME THE EXPLORATION IS MADE

STANDARD SYMBOL (PLANS)	ITEM PAYMENT UNIT: ESTIMATE OF QUANTITIES SHEET	EQUIVALENT NOMENCLATURE: (SPECS/PROPOSAL)
"	-	INCHES
'	LF	LINEAR FEET
ml	MI	MILES
ftq	SF	SQUARE FEET
YDq	SY	SQUARE YARD
AC	AC	ACRES
YDr	CY	CUBIC YARD
GAL	GAL	GALLON
lb	LB	POUND
TON	TON	TON

TOTAL NUMBER OF SHEETS		43
INDEX OF 11x17 DRAWINGS		
SHEET NO.	DESCRIPTION	DRAWING NUMBER
1	TITLE SHEET	COV-01
2	INDEX AND ABBREVIATIONS	IND-01
3 - 4	LEGEND SHEETS	LEG-01 TO LEG-02
5	ELECTRONIC FILES IDENTIFIED AS PLANS	ELE-01
6 - 9	TYPICAL SECTIONS	TYP-01 TO TYP-04
10	MAINTENANCE JURISDICTION TABLE	MJT-01
11-13	MISCELLANEOUS TABLES	MST-01 TO MST-03
14-26	MISCELLANEOUS DETAILS	MSD-01 TO MSD-13
27	RIGHT OF WAY TABLES	RWT-01
28-31	SIGN TEXT DATA SHEETS	SDS-01 TO SDS-04
32	TRAFFIC SIGNAL NOTES	TSN-01
33	TRAFFIC SIGNAL DETAIL	TSD-01
34 - 38	TRAFFIC SIGNAL PLANS	TSP-01 TO TSP-05
39 - 40	LANDSCAPE TABLES	LAT-01 TO LAT-02
41	LANDSCAPE PLANS	LAP-01
42 - 43	UTILITY DISPOSITION TABLE	UTT-01 TO UTT-02

TOTAL NUMBER OF SHEETS		3
HIGHWAY INDEX OF ROLL PLOT DRAWINGS		
SHEET NO.	DESCRIPTION	DRAWING NUMBER
RP-1	HIGHWAY GENERAL PLANS	GNP-01
RP-2	SIGNING AND STRIPING PLANS	SSP-01
RP-3	UTILITY AND DRAINAGE PLANS	UDP-01

HIGHWAY INDEX OF ELECTRONIC FILES IDENTIFIED AS PLANS		
DESCRIPTION	DIGITAL DATA[1]	SUPPLEMENTAL INFORMATION[2]
RTE 46 - HORIZONTAL ALIGNMENT REPORT	D265579_R2_fea_rwy_xml_01	D265579_R2_fea_rwy_alg_01.PDF
WRIGHT SETTLEMENT_NORTH MADISON HORIZONTAL ALG. REPORT	D265579_R2_fea_rwy_xml_02	D265579_R2_fea_rwy_alg_02.PDF
N. JAMES ST. HORIZONTAL ALIGNMENT REPORT	D265579_R2_fea_rwy_xml_03	D265579_R2_fea_rwy_alg_03.PDF
RTE 46 & WRIGHT SETTLEMENT S.E. QUAD PAVED EDGE	D265579_R2_fea_rwy_xml_04	D265579_R2_fea_rwy_alg_04.PDF
N. JAMES ST. PAVED EDGE	D265579_R2_fea_rwy_xml_05	D265579_R2_fea_rwy_alg_05.pdf
RTE 46 & WRIGHT SETTLEMENT S.W. QUAD PAVED EDGE	D265579_R2_fea_rwy_xml_06	D265579_R2_fea_rwy_alg_06.pdf
RTE 46 & WRIGHT SETTLEMENT N.E. QUAD PAVED EDGE	D265579_R2_fea_rwy_xml_07	D265579_R2_fea_rwy_alg_07.pdf
RTE 46 & WRIGHT SETTLEMENT N.W. QUAD PAVED EDGE	D265579_R2_fea_rwy_xml_08	D265579_R2_fea_rwy_alg_08.pdf
RTE 46 SCHOOL DRIVE S.W. EDGE TO MEDICAL FACILITY PAVED EDGE	D265579_R2_fea_rwy_xml_09	D265579_R2_fea_rwy_alg_09.pdf
DRIVEWAY 16 N. MADISON ST. PAVED EDGE	D265579_R2_fea_rwy_xml_10	D265579_R2_fea_rwy_alg_10.pdf
RAZZANO AVE. N.W. QUAD PAVED EDGE	D265579_R2_fea_rwy_xml_11	D265579_R2_fea_rwy_alg_11.pdf
SURVEY BASELINE	D265579_R2_FEA_RWY_BSL_XML	D265579_R2_FEA_RWY_BSL_XML.pdf

NOTES:
1. REFER TO D265579_R2_ELECTRONIC FILES FOR PLANS.ZIP FOR DIGITAL DATA FILES
2. REFER TO SUPPLEMENTAL INFORMATION FOR BIDDERS FOR SUPPORTING INFORMATION.

CITY OF ROME: BLACK RIVER BLVD. ART. RTE 46-S.H. 9383

COUNTY: ONEIDA REGION: 02

PIN 2806.52
RTE 46
UTILITY QUALITY LEVEL D

BRIDGES

CULVERTS

ALL DIMENSIONS IN ft UNLESS OTHERWISE NOTED

INDEX

CONTRACT NUMBER D265579

DRAWING NO. IND-01
SHEET NO. 2

NEW YORK STATE Department of Transportation

PROJECT MANAGER THOMAS N. RASTANI JR.
CHECK ROBERT SPARACINO
DRAFTING ADAM P. KLOSNER
CHECK ROBERT SPARACINO
DESIGN RYAN FITZGERALD
JOB MANAGER THOMAS N. RASTANI JR.
DESIGN SUPERVISOR DAVID P. FACCHINI

FILE NAME = 2806.52_CPH_IND.dgn
DATE/TIME = 27-AUG-2025 17:49
USER = RFitzgerald1

ALIGNMENT

STYLE	NAME	DESCRIPTION
	AC	CONTROL (CENTERLINE)
	AD_P	DETOUR
	AT_P	TRANSITION CONTROL

BRIDGE

STYLE	NAME	DESCRIPTION
	BR	RAIL
	BSHT	SHEET PILING

CONTROL

STYLE	NAME	DESCRIPTION
	CB	BASELINE
	CBPR	BASELINE, PROJECTION

DRAINAGE

STYLE	NAME	DESCRIPTION
ST	DCP	CULVERT PIPE
ST	DCP_P	CULVERT PIPE (DIR)
	DDG_P	DITCH, GRASS LINED
	DDP_P	DITCH, PAVED INVERT
	DDS_P	DITCH, STONE LINED
	DFL_P	FLOW LINE
	DSSD	SLOTTED DRAIN
UD	DUD_P	UNDERDRAIN

ENVIRONMENTAL

STYLE	NAME	DESCRIPTION
	ECT	CURTAIN, TURBIDITY
	EDMC	DAM, COFFER
	EDMEC_P	DAM, EARTHEN CHECK
	EDMGSC_P	DAM, GRAVEL BAG/SAND BAG CHECK
	EDMPC_P	DAM, PREFABRICATED CHECK
	EDMSC_P	DAM, STONE CHECK
	EFNS	FENCE, SILT
	EFNSV	FENCE, SILT & VEGETATION
	EFNV	FENCE, VEGETATION
FL	ESFL	FILTER, SEDIMENT LOG
AA	EWAA_P	WETLAND, ADJACENT AREA
FW	EWF	WETLAND, FEDERAL
FW SW	EWFS	WETLAND, FEDERAL AND STATE
WM	EWM	WETLAND, MITIGATION AREA
SW	EWS	WETLAND, STATE

LANDSCAPE

STYLE	NAME	DESCRIPTION
	LABL	AREA, BRUSH LINE
	LAHR	AREA, HEDGE ROW
	LAPB	AREA, PLANTING BED
	LAWA	AREA, WOODED AREA OUTLINE
	LAWE	AREA, WATERS EDGE
	LCUT_P	CUT LIMIT
	LFILL_P	FILL LIMIT
	LFNC	FENCE
	LTRC	TREE ROW, CONIFEROUS
	LTRD	TREE ROW, DECIDUOUS
	LWH	WALL, H PILE
	LWR	WALL, RETAINING
	LWS	WALL, STONE

ROW MAPPING

STYLE	NAME	DESCRIPTION
	MDL	DEED LINE
PE	MEE	EASEMENT, EXISTING
PE	MEP_P	EASEMENT, PERMANENT
APE	MEPA_P	EASEMENT, PERMANENT, APPROX.
TE	MET_P	EASEMENT, TEMPORARY
ATE	META_P	EASEMENT. TEMPORARY, APPROX.
FEE	MF_P	FEE ACQUISITION, W/ ACCESS
AFEE	MFA_P	FEE ACQUISITION, APPROXIMATE
	MFS_P	FEE ACQUISITION, SHAPE
FEE W / OA	MFWOA_P	FEE ACQUISITION, W/O ACCESS
	MHA	HISTORICAL, ACQUISITION
HB	MHB	HIGHWAY BOUNDARY, W/ ACCESS
AHB	MHBA	HIGHWAY BOUNDARY, APPROX.
	MHBW	HWY BOUNDARY, FACE OF WALL
HB W / OA	MHBWOA	HIGHWAY BOUNDARY, W/O ACCESS
	MJC	JURISDICTION, CITY
	MJCY	JURISDICTION, COUNTY
	MJHD	JURISDICTION, HISTORIC DISTRICT
	MJLL	JURIS., (GREAT, MILITARY) LOT LINE
	MJN	JURISDICTION, NATION
	MJPB	JURISDICTION, PUBLIC LANDS
	MJS	JURISDICTION, STATE
	MJT	JURISDICTION, TOWN
	MJV	JURISDICTION, VILLAGE
PL	MPL	PROPERTY LOT LINE
APL	MPLA	PROPERTY LOT LINE, APPROXIMATE
Z	MSL	SUB LOT LINE

ROADWAY

STYLE	NAME	DESCRIPTION
CZ	RCZ_P	CLEAR ZONE
	RG	GUIDE RAIL, MISCELLANEOUS
	RGB	GUIDE RAIL, BOX BEAM
	RGBM	GUIDE RAIL, BOX BEAM, MEDIAN
	RGC	GUIDE RAIL, CABLE
	RGCB	GUIDE RAIL, CONCRETE BARRIER
	RGP_P	GUIDE POST
	RGW	GUIDE RAIL, W BEAM
	RGWM	GUIDE RAIL, W BEAM, MEDIAN
	RPB	PARKING BUMPER
	RRC	RAIL ROAD, CATENARY
3R	RRER	RAIL ROAD, 3RD RAIL
	RRPLS_P	RAIL, PHOTO, LARGE SCALE
	RRPSS	RAIL, PHOTO, SMALL SCALE
	RRS	RUMBLE STRIP
	RRSLS_P	RAIL, SURVEY, LARGE SCALE
	RRSSS	RAIL, SURVEY, SMALL SCALE

SIGNS

STYLE	NAME	DESCRIPTION
	SBLB	BILLBOARDS
	SM	MULTIPLE POST
	SSO	STRUCTURE, OVERHEAD
	SSOC	STRUCTURE, OVHD. CANTILEVER

STRIPING

STYLE	NAME	DESCRIPTION
	STB*	BROKEN LINE
	STDB*	DOUBLE BROKEN LINE
	STDL*	DOTTED LINE LONG
	STDS*	DOTTED LINE SHORT
	STFB*	FULL BARRIER LINE
	STH*	HATCH LINE
	STPB*	PARTIAL BARRIER LINE
	STRCT	ROUNDABOUT, CAT TRACKS
	STRYL	ROUNDABOUT, YIELD LINE
	STSB	STOP BAR
	STSE*	SOLID, EDGE
	STXL	X WALK, LADDER LINE
	STXLB	X WALK, LADDER BAR LINE

* = W (WHITE) OR Y (YELLOW)

TRAFFIC CONTROL

STYLE	NAME	DESCRIPTION
	TCSW	SIGNAL, SPAN WIRE

TRAFFIC WORK ZONE

STYLE	NAME	DESCRIPTION
	TWZBT_P	BARRIER, TEMPORARY
	TWZBTWL_P	BARRIER, TEMPORARY, W/ WARNING LIGHTS
	TWZCD_P	CHANNELIZING DEVICE
	TWZPMRC_P	PAVEMENT MARKING REMOVAL OR COVERING

UTILITIES

STYLE	NAME	DESCRIPTION
C	UC	CONDUIT, UNDERGROUND
]C[	UCH	CONDUIT, HANGING
OC	UCO	CONDUIT, OVERHEAD
E	UE	ELECTRIC LINE, UNDERGROUND
]E[	UEH	ELECTRIC LINE, HANGING
OE	UEO	ELECTRIC LINE, OVERHEAD
OET	UETO	ELECTRIC TRANSMISSION, OVERHEAD
	UESS	ELECTRIC, SUBSTATIONS
FO	UFO	FIBER OPTIC, UNDERGROUND
]FO[	UFOH	FIBER OPTIC, HANGING
OFO	UFOO	FIBER OPTIC, OVERHEAD
G	UG	GAS, UNDERGROUND
]G[	UGH	GAS, HANGING
OG	UGO	GAS, OVERHEAD
IC	UIC	INFORM CABLE, UNDERGROUND
]IC[	UICH	INFORM CABLE, HANGING
O	UO	OIL LINE, UNDERGROUND
]O[	UOH	OIL LINE, HANGING
	UPBP	POLE, BRACE, PUSH BRACE
	UPGW	POLE, GUY WIRE
SA	USA	SANITARY SEWER, UNDERGROUND
]SA[	USAH	SANITARY SEWER, HANGING
SAF	USAF	SANITARY SEWER, FORCE MAIN, UGND
]SAF[	USAFH	SANITARY SEWER, FORCE MAIN, HANG
T	UT	TELEPHONE, UNDERGROUND
]T[	UTH	TELEPHONE, HANGING
OT	UTO	TELEPHONE, OVERHEAD
CTV	UTV	CABLE TV, UNDERGROUND
]CTV[	UTVH	CABLE TV, HANGING
OCTV	UTVO	CABLE TV, OVERHEAD
UU	UUU	UNKNOWN, UNDERGROUND
]UU[	UUH	UNKNOWN, HANGING
OUU	UUO	UNKNOWN, OVERHEAD
W	UW	WATER LINE, UNDERGROUND
]W[	UWH	WATER LINE, HANGING
OW	UWO	WATER LINE, OVERHEAD

1. THE LEGEND ILLUSTRATES MAPPING FEATURES (EXISTING AND PROPOSED).
2. FEATURES ARE SHOWN AS EITHER LINEAR (ROADWAY GUIDERAIL, ROADWAY SIDEWALK, UTILITY LINES, ETC.) OR POINT (SIGN, UTILITY POLE, ETC.).
3. FEATURES SHOWN ON THE LEGEND AS EXISTING FEATURES ALSO HAVE CORRESPONDING PROPOSED FEATURES.
4. PROPOSED FEATURE SYMBOLOGY IS IDENTICAL TO EXISTING FEATURE SYMBOLOGY EXCLUDING LINE WEIGHT. LINE WEIGHT FOR PROPOSED FEATURES IS THICKER (0.015 In ON B SIZE DRAWINGS).
5. MAPPING FEATURES NOT INCLUDED ON THE LEGEND SHEET DO NOT HAVE A UNIQUE SYMBOLOGY (SUCH AS THE PAVEMENT EDGE, PAVEMENT EDGE OF TRAVEL WAY) AND SHOULD BE LABELED ON THE PLANS.
6. FEATURES SHOWN AT THE HEAVIER WEIGHT ARE PROPOSED ONLY AND DO NOT HAVE CORRESPONDING EXISTING FEATURES.

CITY OF ROME: BLACK RIVER BLVD. ART. RTE 46-S.H. 9383	PIN 2806.52 RTE 46 UTILITY QUALITY LEVEL D	BRIDGES	CULVERTS	ALL DIMENSIONS IN ft UNLESS OTHERWISE NOTED LEGEND - LINE SYMBOLOGY	CONTRACT NUMBER D265579
COUNTY: ONEIDA REGION: 02					DRAWING NO. LEG-01 SHEET NO. 3

NEW YORK STATE Department of Transportation

PROJECT MANAGER THOMAS N. RASTANI JR.
CHECK ROBERT SPARACINO
DRAFTING ADAM P. KLOSNER
DESIGN RYAN FITZGERALD
CHECK ROBERT SPARACINO
JOB MANAGER THOMAS N. RASTANI JR.
DESIGN SUPERVISOR DAVID P. FACCHINI

FILE NAME = 2806.52_CPH_LEG_01.dgn
DATE/TIME = 31-JUL-2025 14:06
USER = rsparacino

ALIGNMENT

CELL	NAME	DESCRIPTION
	ACC	CENTER OF CURVATURE
	ACOGO	COGO
	ACS	CURVE TO SPIRAL
	ADPI_P	DETOUR, POINT OF INTERSECT.
	ADPL_P	DETOUR, POINT ON LINE
	AEQN	EQUATION
	AEQNAHD	EQUATION AHEAD
	AEQNBK	EQUATION BACK
	AEVT	EVENT STATION
	APC	POINT OF CURVATURE
	APCC	POINT OF COMPOUND CURVATURE
	API	POINT OF INTERSECTION
	APOB	POINT OF BEGINNING
	APOC	POINT OF CURVATURE
	APOE	POINT OF END
	APOL	POINT ON LINE
	APOS	POINT ON SPIRAL
	APOT	POINT ON TANGENT
	APOVC	POINT ON VERTICAL CURVE
	APOVT	POINT ON VERTICAL TANGENT
	APRC	POINT ON REVERSE CURVE
	APT	POINT OF TANGENCY
	APVC	POINT OF VERTICAL CURVATURE
	APVCC	POINT OF VERT. CMPND CURVE
	APVI	POINT OF VERT. INTERSECTION
	APVRC	POINT OF VERT. REVERSE CURVE
	APVT	POINT OF VERTICAL TANGENCY
	ASC	SPIRAL TO CURVE
	ASPI	SPIRAL POINT OF INTERSECTION
	ASTS	SPIRAL TO SPIRAL
	AST	SPIRAL TO TANGENT
	ATS	TANGENT TO SPIRAL
	AVEVT	VERTICAL EVENT POINT
	AVHIGH	VERTICAL HIGH POINT
	AVLOW	VERTICAL LOW POINT

BRIDGE

	BSC	BRIDGE, SCUPPER

CONTROL

	CBP	BASELINE, POINT
	CBPOL	BASELINE, POINT ON LINE
	CBSP	BASELINE, SPUR POINT
	CBTP	BASELINE, TIE POINT
	CPBM	BENCHMARK
	CPH	POINT, HORIZ. PHOTOGRAMMETRY
	CPSM	POINT, SURVEY MARKER, PERM.
	CPV	POINT, VERT., PHOTOGRAMMETRY

DRAINAGE

CELL	NAME	DESCRIPTION
	DINV	INVERT
	DS	STRUCTURE, RECTANGULAR
	DSI	STRUCTURE, INVERT
	DSM	STRUCTURE, MANHOLE
	DSMTXX_P	STRUCTURE, MANHOLE, TYPE "XX" "XX" = 48, 60, 72, 84, 96
	DSR	STRUCTURE, ROUND
	DST"X"CB_P	STRUCTURE, RECT., WITH CURB TYPE "X" "X" = F, G, N, O, P, R
	DST"X"_P	STRUCTURE, RECT., TYPE "X" "X" = I, K, L, M, O, P, U

ENVIRONMENTAL

CULV	EIOP_P	STR., INLET, OUTLET PROT.
GB	EIPGB_P	STR., INLET PROT., GRAVEL BAG
FL	EIPEFL_P	STR., INLET PROT., FILTER LOG
PRFB	EIPP_P	STR., INLET PROT., PREFAB.
SF	EIPSF_P	STR., INLET PROT., SILT FENCE
	ERCB	RISER, CONCRETE BOX
	ETRS_P	TRAP, SEDIMENT
	EWFG	WETLAND FLAG

GEOTECHNICAL

	GDH	DRILL HOLE

LANDSCAPE

	LELS	ELEVATION, SPOT
	LFP	FLAG POLE
	LMB	MAILBOX
	LPB	PAPER BOX
	LPST	POST, SINGLE
	LRB	ROCK, BOULDER
	LSHC	SHRUB, CONIFEROUS
	LSHD	SHRUB, DECIDUOUS
	LTC	TREE, CONIFEROUS
	LTD	TREE, DECIDUOUS
	LTS	TREE, STUMP
	LTW_P	TREE, WELL OR WALL
	LUKP	UNKNOWN POINT

ITS

CELL	NAME	DESCRIPTION
A	IANT_P	ANTENNAS
AI	IASCTS	ACCOU. SPEED/COUNT SNSR.S
P	ICABPAD	CABINET & PAD
	ICCTV	CCTV SITE
CDPD	ICDPD	CDPD TRANSCEIVER
	ICELLT	CELL PHONE TOWER
	ICJB	CONDUIT JACK OR BORING
	ICNTLCAB	CONTROLLER CABINET
C	ICPB	COMMUNICATION PULL BOX
	ICTD	CONDUIT TURNING DOWN
	ICTU	CONDUIT TURNING UP
C	ICVTRT	COMM. VEH. ROAD TRANSCEIVER
	IDEFAULT	DEFAULT
EZ	IEZR	E-ZPASS READER
EZ-T	IEZTR	TRANSMITTAL READER
XC	IFOXCAB	FIBER OPTIC X-CONNECT CABINET
	IFUSSPL	FUSION SPLICE
	IHARADV	HAR ADVISORY SIGN
H	IHARST	HAR SITE
LC	ILC	LOAD CENTER
	IMECSPL	MECHANICAL SPLICE
PM	IMSCS	PORT. SPEED & COUNT SENSOR
M	IMSCTS	MICRO SPEED & COUNT SENSOR
M	IMT	MICROWAVE TRANSCEIVER
VMS	IOVHVMS	PERM. OVERHEAD VMS
PA	IPASCS	PORT. ACCOU. SPD & CNT. SENSOR
	IPEDS	PEDESTRIAN SIGNAL HEAD
	IPSS	PAVEMENT SURFACE SENSOR
PVMS	IPVMS	PERM. VMS
RM	IRM	RAMP METER
RWIS	IRWIS	RDWY WEATHER INFO. SENSOR
	ISP	SOLAR PANEL
SS	ISST	SPREAD SPECT. TRANSCEIVER
TC	ITDB	TELEPHONE DEMARCATION BLK
TP	ITP	SUBSURFACE TEMP. PROBE
	IVTRT	VEHICLE TO RDWY TRANSCEIVER
WIM	IWIMD	WEIGHT IN MOTION DETECTOR
WVR	IWVR	WIRELESS VIDEO REPEATER
V	IWVRC	WIRELESS VIDEO RECEIVER
V	IWVTT	WIRELESS VIDEO TRANSMITTER

ROW MAPPING

CELL	NAME	DESCRIPTION
	MDL1P	DEED LINE, TYPE 1
	MDL2P	DEED LINE, TYPE 2
	MDL3P	DEED LINE, TYPE 3
	MDL4P	DEED LINE, TYPE 4
	MDL5P	DEED LINE, TYPE 5
	MEEP	EASEMENT, EXISTING
A	MEPAP_P	EASEMENT, PERM., APPROX.
	MEPP_P	EASEMENT, PERM., BACK LINE
	MEPSP_P	EASEMENT, PERM., SHAPE
A	MFAP_P	FEE ACQUISITION, APPROX.
	MFP_P	FEE ACQUISITION, BACK LINE
	MFSP_P	FEE ACQUISITION, SHAPE
	MHBAP	HIGHWAY BNDRY., APPROX.
	MHBCP	HISTORICAL, BLDG. CORNERS
	MHBP	HIGHWAY BNDRY, PT.
	MJCP	PT., JURIS. CITY
	MPBC	PT., BUILDING CORNER
	MPCC	PT., CROSS CUT
	MPDH	PT., DRILL HOLE
	MPF	PT., FENCE LOCATION
	MPIP	PT., IRON PIPE
	MPIR	PT., IRON ROD
	MPM	PT., MONUMENT
	MPMM	PT., MONUMENT, MISC.
	MPN	PT., NAIL
	MPRS	PT., RAILROAD SPIKE
	MPSP	PT., SPIKE
	MPST	PT., STAKE
	MPTW	PT., TREE W/ WIRE
	MPWL	PT., WALL LOCATION

ROW ACQUISITION

M1 P1 FEE	MFS_P_T	FEE ACQUISITION
M1 P1 PE	MEPS_P_T	EASEMENT, PERMANENT
M1 P1 TE	METS_P_T	EASEMENT, TEMPORARY
M1 P1 TO	METS_P_T	OCCUPANCY, TEMPORARY
M1 P1 FEE WO/A	MFS_P_T	FEE ACQUISITION W/O ACCESS

ROADWAY

	RES_P	ELEVATION, SPOT
	RGA	GUIDE RAIL, ANCHOR
	RGP	GUIDE POST, SINGLE

SIGNS

CELL	NAME	DESCRIPTION
	S	SINGLE POST
	S_P	SINGLE POST, PROPOSED
	SB_P	BACK TO BACK, PROPOSED
	SDEL	DELINEATORS
	SPM	PARKING METER
RFM	SRM	REFERENCE MARKERS
	SRSC3	SHLD, CTY, 123 DIG.
	SRSC4	SHLD, CTY, 4 DIG.
	SRSCT2	SHLD, CTY TOUR, 1-2 DIG.
	SRSCT4	SHLD, CTY TOUR, 3-4 DIG.
	SRSI	SHLD, INTERSTATE
	SRSN2	SHLD, NATIONAL, 2 DIG.
	SRSN3	SHLD, NATIONAL, 3 DIG.
	SRSS2	SHLD, STATE, 2 DIG.
	SRSS3	SHLD, STATE, 3 DIG.
	SRSS4	SHLD, STATE, 4 DIG.

TRAFFIC CONTROL

	TCBJ	BOX, JUNCTION
	TCBP	BOX, PULL BOX
	TCBS	BOX, SPLICE
	TCMC	MICROCOMPUTER CABINET
	TCPP	PED POLE
	TCSH	SIGNAL HEADS
	TCSP	SIGNAL POLE

TRAFFIC WORK ZONE

	TWZAP_P	ARROW PANEL
	TWZAPC_P	ARROW PANEL, CAUTION MODE
	TWZAPT_P	ARROW PANEL, TRAILER OR SUPPORT
	TWZBCD_P	BARRICADE (TYPE III)
	TWZCMS_P	CHANGEABLE MESSAGE SIGN (PVMS)
	TWZFLG_P	FLAGGER
	TWZFT_P	FLAG TREE
	TWZIA_P	IMPACT ATTENUATOR / CRASH CUSHION (TEMPORARY)
	TWZLUM_P	LUMINAIRE (TEMPORARY)
	TWZSDT_P	SYMBOL, DIRECTION OF TRAFFIC
	TWZSDTD_P	SYMBOL, DIRECTION OF TEMPORARY TRAFFIC DETOUR
	TWZSGN_P	SIGN (TEMPORARY)
	TWZSIG_P	SIGNAL, TRAFFIC OR PEDESTRIAN (TEMPORARY)
	TWZWL_P	WARNING LIGHT
	TWZWV_P	WORK VEHICLE
	TWZWVA_P	WORK VEHICLE WITH TRUCK MOUNTED ATTENUATOR

UTILITIES

CELL	NAME	DESCRIPTION
E	UEB	ELECTRIC, BOX
E	UEM	ELECTRIC, METER
E	UEMH	ELECTRIC, MANHOLE
	UEPT	ELECTRIC, POLE, TRANS.
G	UGM	GAS, METER
G	UGMH	GAS, MANHOLE
	UGLM	GAS, LINE MARKER
FP	UGP	GAS/FUEL PUMP
	UGV	GAS, VALVE
	UGVT	GAS, VENT
	ULP	LIGHTING, POLE
	ULPM	LIGHTING, POLE, MEDIAN
	ULPP	LIGHTING, POLE, PED.
	UMFC	MISC. FILLER CAP
	UOLM	OIL, LINE MARKER
	UP	POLE, WITH UTILITY
	UPD	POLE, DEAD (NO UTILITY)
	UPL	POLE, WITH LIGHT
S	USMH	SANITARY SEWER MANHOLE
P	UTB	TELEPHONE, BOOTH
	UTLM	TELEPHONE, LINE MARKER
T	UTMH	TELEPHONE, MANHOLE
	UTVLM	CABLE TV, LINE MARKER
C	UTVPB	CABLE TV, PULL BOX
	UUB	UNKNOWN, BOX
	UUJB	UNKNOWN, JUNCTION BOX
	UUMH	UNKNOWN, MANHOLE
	UUPB	UNKNOWN, PULL BOX
	UUVL	UNKNOWN, VALVE
	UUVT	UNKNOWN, VENT
U	UUW	UNKNOWN, WELL
	UWFH	WATER, FIRE HYDRANT
W	UWM	WATER, METER
W	UWMH	WATER, MANHOLE
	UWV	WATER, VALVE
W	UWW	WATER, WELL

1. THE LEGEND ILLUSTRATES MAPPING FEATURES (EXISTING AND PROPOSED).
2. FEATURES ARE SHOWN AS EITHER LINEAR (ROADWAY GUIDERAIL, ROADWAY SIDEWALK, UTILITY LINES, ETC.) OR POINT (SIGN, UTILITY POLE, ETC.).
3. FEATURES SHOWN ON THE LEGEND AS EXISTING FEATURES ALSO HAVE CORRESPONDING PROPOSED FEATURES.
4. PROPOSED FEATURE SYMBOLOGY IS IDENTICAL TO EXISTING FEATURE SYMBOLOGY EXCLUDING LINE WEIGHT. LINE WEIGHT FOR PROPOSED FEATURES IS THICKER (0.015 in ON B SIZE DRAWINGS).
5. MAPPING FEATURES NOT INCLUDED ON THE LEGEND SHEET DO NOT HAVE A UNIQUE SYMBOLOGY (SUCH AS THE PAVEMENT EDGE, PAVEMENT EDGE OF TRAVEL WAY) AND SHOULD BE LABELED ON THE PLANS.
6. FEATURES SHOWN AT THE HEAVIER WEIGHT ARE PROPOSED ONLY AND DO NOT HAVE CORRESPONDING EXISTING FEATURES.

CITY OF ROME: BLACK RIVER BLVD. ART. RTE 46-S.H. 9383	PIN 2806.52 RTE 46 UTILITY QUALITY LEVEL D	BRIDGES	CULVERTS	ALL DIMENSIONS IN ft UNLESS OTHERWISE NOTED
COUNTY: ONEIDA REGION: 02				LEGEND - POINT SYMBOLOGY

CONTRACT NUMBER D265579

DRAWING NO. LEG-02

SHEET NO. 4

NEW YORK STATE Department of Transportation

PROJECT MANAGER THOMAS N. RASTANI JR. | CHECK ROBERT SPARACINO | DRAFTING ADAM P. KLOSNER | CHECK ROBERT SPARACINO | DESIGN RYAN FITZGERALD | JOB MANAGER THOMAS N. RASTANI JR. | DESIGN SUPERVISOR DAVID P. FACCHINI

FILE NAME = 2806.52_CPH_LEG_02.dgn
DATE/TIME = 31-JUL-2025 14:08
USER = rsparacino

ELECTRONIC FILES IDENTIFIED AS PLANS

	FILE NAME	FILE DESCRIPTION	DATE/TIME MODIFIED	AFFIX SEAL: 8/11/2025	ALTERED BY:
PROFESSIONAL OF RECORD	***HORIZONTAL ROADWAY ALIGNMENTS***				
	D265579_R2_FEA_RWY_XML_01.XML	ROUTE 46 - HORIZONTAL ALIGNMENT REPORT	4/7/2025 12:22:00		
	D265579_R2_FEA_RWY_XML_02.XML	WRIGHT SETTLEMENT & N MADISON - HORIZONTAL ALIGNMENT REPORT	4/7/2025 12:52:00		
	D265579_R2_FEA_RWY_XML_03.XML	N JAMES STREET - HORIZONTAL ALIGNMENT REPORT	4/7/2025 13:11:00		
	HORIZONTAL AND VERTICAL PROPOSED PAVED EDGE ALIGNMENTS				
	D265579_R2_FEA_RWY_XML_04.XML	RTE. 46 & WRIGHT SETTLEMENT - S.E. QUAD PROPOSED PAVED EDGE	7/3/2025 12:51:00		
	D265579_R2_FEA_RWY_XML_05.XML	N JAMES ST - PROPOSED PAVED EDGE	3/5/2025 13:24:00		
	D265579_R2_FEA_RWY_XML_06.XML	RTE. 46 & WRIGHT SETTLEMENT - S.W. QUAD PROPOSED PAVED EDGE	3/5/2025 13:58:00		
	D265579_R2_FEA_RWY_XML_07.XML	RTE. 46 & WRIGHT SETTLEMENT - N.E. QUAD PROPOSED PAVED EDGE	3/5/2025 13:27:00		
	D265579_R2_FEA_RWY_XML_08.XML	RTE. 46 & WRIGHT SETTLEMENT - N.W. QUAD PROPOSED PAVED EDGE	3/5/2025 14:53:00		
	D265579_R2_FEA_RWY_XML_09.XML	RTE. 46 SCHOOL DRIVEWAY - TO MEDICAL FACILITY PROPOSED PAVED EDGE	3/5/2025 3:08:00		
	D265579_R2_FEA_RWY_XML_10.XML	DRIVEWAY 16_N MADISON ST_PROPOSED PAVED EDGE	4/14/2025 10:22:00		
	D265579_R2_FEA_RWY_XML_11.XML	RAZZANO AVE. N.W QUADRANT PROPOSED PAVED EDGE	4/14/2025 10:58:00		
PROFESSIONAL OF RECORD	***SURVEY BASELINE***			S. ARTHUR 8/14/2025	
	D265579_R2_FEA_RWY_BSL_XML.XML	ROUTE 46 SURVEY/BASELINE FILE	7/9/2025 8:57:00		

STATE OF NEW YORK
THOMAS N. RASTANI JR.
087842
LICENSED PROFESSIONAL ENGINEER

STATE OF NEW YORK
STEPHEN D. ARTHUR
051166
LICENSED LAND SURVEYOR

ELECTRONIC FILES IDENTIFIED AS PLANS - FIELD REVISION SUMMARY

REVISED FILE NAME	REVISED BY	DATE REVISED	DESCRIPTION OF ALTERATIONS

AS-BUILT REVISIONS
DESCRIPTION OF ALTERATIONS:

CITY OF ROME: BLACK RIVER BLVD. ART. RTE 46-S.H. 9383

COUNTY: ONEIDA REGION: 02

PIN 2806.52
RTE 46
UTILITY QUALITY LEVEL D

BRIDGES

CULVERTS

ALL DIMENSIONS IN ft UNLESS OTHERWISE NOTED

ELECTRONIC FILES IDENTIFIED AS PLANS

CONTRACT NUMBER
D265579

DRAWING NO. ELE-01
SHEET NO. 5

NEW YORK STATE Department of Transportation

PROJECT MANAGER THOMAS N. RASTANI JR. CHECK ROBERT SPARACINO DRAFTING ADAM P. KLOSNER CHECK ROBERT SPARACINO DESIGN RYAN FITZGERALD JOB MANAGER THOMAS N. RASTANI JR. DESIGN SUPERVISOR DAVID P. FACCHINI

FILE NAME = 2806.52_CPH_ELE_01.dgn
DATE/TIME = 31-JUL-2025 14:09
USER = rsparacino

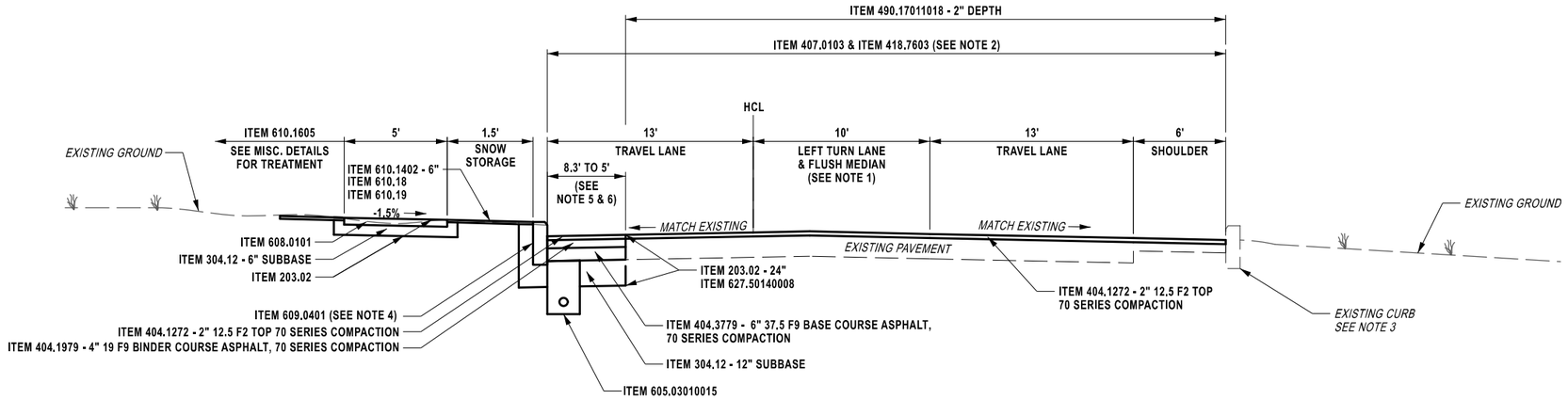

TYPICAL SECTION #2
MILL, RESURFACING & RECONSTRUCTION

BLACK RIVER BLVD., ROUTE 46
STA. A 113+44 TO STA. A 116+50

(NOT TO SCALE)

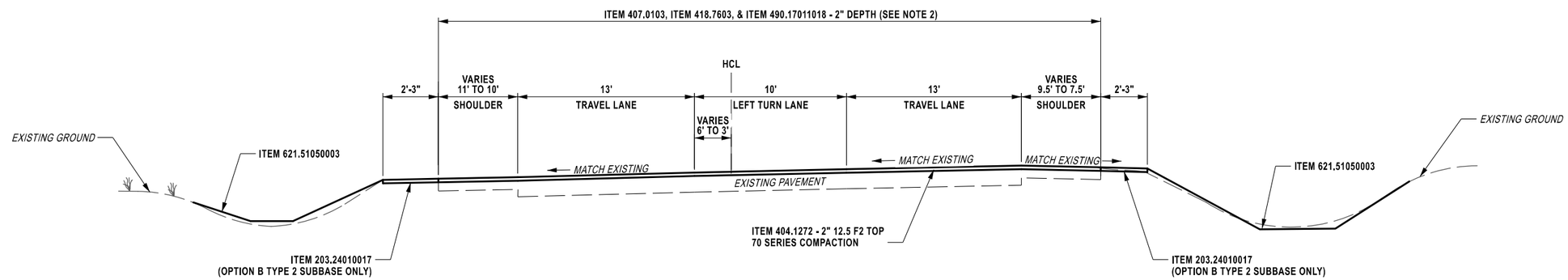

TYPICAL SECTION #1
MILL AND RESURFACING

BLACK RIVER BLVD., ROUTE 46
STA. A 112+13 TO STA. A 113+44

(NOT TO SCALE)

ITEM	DESCRIPTION	UNIT	ITEM	DESCRIPTION	UNIT
203.02	UNCLASSIFIED EXCAVATION AND DISPOSAL	CY	605.03010015	INSTALLATION OF 4 INCH UNDERDRAIN (ALL WORK INCLUDED)	LF
203.24010017	SHOULDER BACKUP MATERIAL	TON	608.0101	CONCRETE SIDEWALKS AND DRIVEWAYS	CY
304.12	SUBBASE COURSE, TYPE 2	CY	609.0401	CAST-IN-PLACE CONCRETE CURB TYPE VF6	LF
404.0189	TRUING AND LEVELING F9, ASPHALT, 80 SERIES COMPACTION	TON	610.1402	TOPSOIL - ROADSIDE	CY
404.1272	12.5 F2 TOP COURSE ASPHALT, 70 SERIES COMPACTION	TON	610.1605	TURF ESTABLISHMENT PERFORMANCE	SY
404.1979	19 F9 BINDER COURSE ASPHALT, 70 SERIES COMPACTION	TON	610.18	SODDING	SY
404.3779	37.5 F9 BASE COURSE ASPHALT, 70 SERIES COMPACTION	TON	610.19	WATER VEGETATION	MGAL
407.0103	STRAIGHT TACK COAT	GAL	621.51050003	GRADING MAINT, CLEANING, TRIMMING & RESHAPING EXISTING ROADSIDE SECTION	LF
418.7603	ASPHALT PAVEMENT JOINT ADHESIVE	LF	627.50140008	CUTTING PAVEMENT	LF
490.17011018	PRODUCTION COLD MICROMILLING	SY			

NOTES:

1. FLUSH MEDIAN TRANSITIONS TO LEFT TURN LANE FROM STA. 114+85 TO STA. 115+55.
2. ASPHALT JOINT ADHESIVE REQUIRED FOR ALL TOP COURSE PAVEMENT JOINTS (TRANSVERSE AND LONGITUDINAL).
3. EXISTING CURB BEGINS AT STA. 113+29 AND ENDS AT STA. 115+35.
4. SEE GENERAL PLANS & MISC. DETAILS
5. ITEM 404.0189 TRUING AND LEVELING TO BE USED AS A SHIM COURSE WEDGE FOR TRAFFIC A.O.B.E.
6. SAWCUT VARIES FROM 8.3' OFFSET TO HCL AT STA. 113+65 TO 5' OFFSET TO HCL AT STA. 114+57.

AFFIX SEAL: ON: 8/13/2025
ALTERED BY: ON:

STATE OF NEW YORK · THOMAS N. RASTANI JR. · 087842 · LICENSED PROFESSIONAL ENGINEER

D265579

AS-BUILT REVISIONS
DESCRIPTION OF ALTERATIONS:

CITY OF ROME: BLACK RIVER BLVD. ART. RTE 46-S.H. 9383

COUNTY: ONEIDA REGION: 02

PIN 2806.52
RTE 46
UTILITY QUALITY LEVEL D

BRIDGES

CULVERTS

ALL DIMENSIONS IN ft UNLESS OTHERWISE NOTED

TYPICAL SECTIONS

CONTRACT NUMBER D265579

DRAWING NO. TYP-01
SHEET NO. 6

IT IS A VIOLATION OF LAW FOR ANY PERSON, UNLESS THEY ARE ACTING UNDER THE DIRECTION OF A LICENSED PROFESSIONAL ENGINEER, ARCHITECT, LANDSCAPE ARCHITECT, OR LAND SURVEYOR, TO ALTER AN ITEM IN ANY WAY. IF AN ITEM BEARING THE STAMP OF A LICENSED PROFESSIONAL IS ALTERED, THE ALTERING ENGINEER, ARCHITECT, LANDSCAPE ARCHITECT, OR LAND SURVEYOR SHALL STAMP THE DOCUMENT AND INCLUDE THE NOTATION "ALTERED BY" FOLLOWED BY THEIR SIGNATURE, THE DATE OF SUCH ALTERATION, AND A SPECIFIC DESCRIPTION OF THE ALTERATION.

NEW YORK STATE Department of Transportation

PROJECT MANAGER THOMAS N. RASTANI JR. CHECK ROBERT SPARACINO DRAFTING ADAM P. KLOSNER CHECK ROBERT SPARACINO DESIGN RYAN FITZGERALD JOB MANAGER THOMAS N. RASTANI JR. DESIGN SUPERVISOR DAVID P. FACCHINI
FILE NAME = 2806.52_CPH_TYP_01.dgn
DATE/TIME = 31-JUL-2025 14:11
USER = rsparacino

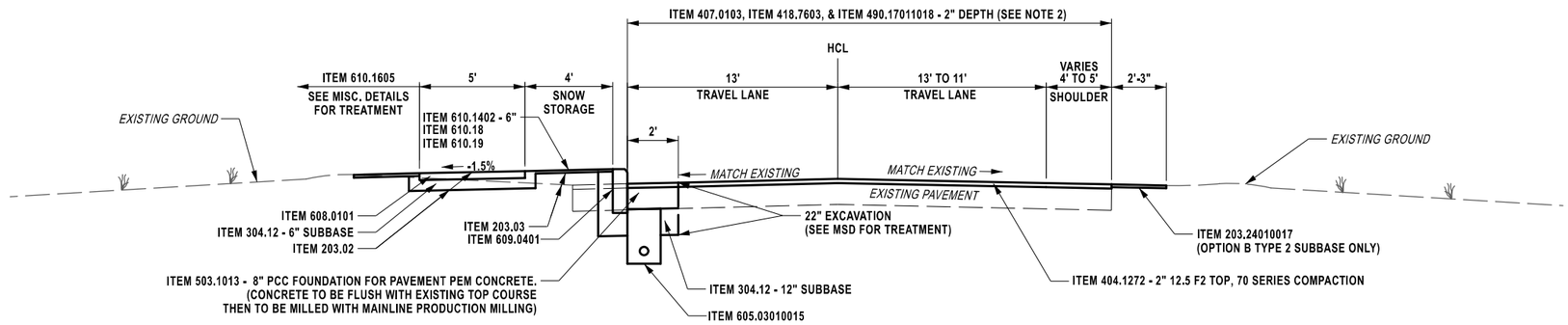

TYPICAL SECTION #4
MILL AND RESURFACING

BLACK RIVER BLVD., ROUTE 46
STA. B 72+26 TO STA. B 74+00

(NOT TO SCALE)

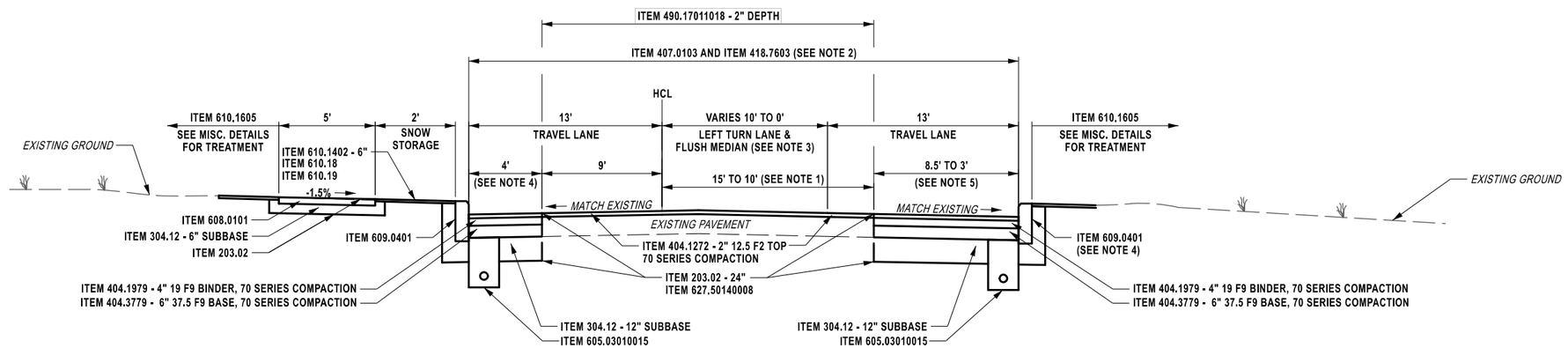

TYPICAL SECTION #3
MILL, RESURFACING & RECONSTRUCTION

BLACK RIVER BLVD., ROUTE 46
STA. B 67+67 TO STA. B 72+26
(STATION EQUATION: STA. A 116+50 = B 67+67)

(NOT TO SCALE)

ITEM	DESCRIPTION	UNIT	ITEM	DESCRIPTION	UNIT
203.02	UNCLASSIFIED EXCAVATION AND DISPOSAL	CY	503.1013	PCC FOUNDATION FOR PAVEMENT, PEM CONCRETE	CY
203.24010017	SHOULDER BACKUP MATERIAL	TON	605.03010015	INSTALLATION OF 4 INCH UNDERDRAIN (ALL WORK INCLUDED)	LF
304.12	SUBBASE COURSE, TYPE 2	CY	608.0101	CONCRETE SIDEWALKS AND DRIVEWAYS	CY
404.0189	TRUING AND LEVELING F9, ASPHALT, 80 SERIES COMPACTION	TON	609.0401	CAST-IN-PLACE CONCRETE CURB TYPE VF6	LF
404.1272	12.5 F2 TOP COURSE ASPHALT, 70 SERIES COMPACTION	TON	610.1402	TOPSOIL - ROADSIDE	CY
404.1979	19 F9 BINDER COURSE ASPHALT, 70 SERIES COMPACTION	TON	610.1605	TURF ESTABLISHMENT PERFORMANCE	SY
404.3779	37.5 F9 BASE COURSE ASPHALT, 70 SERIES COMPACTION	TON	610.18	SODDING	SY
407.0103	STRAIGHT TACK COAT	GAL	610.19	WATER VEGETATION	MGAL
418.7603	ASPHALT PAVEMENT JOINT ADHESIVE	LF	627.50140008	CUTTING PAVEMENT	LF
490.17011018	PRODUCTION COLD MICROMILLING	SY			

NOTES:

1. SAWCUT VARIES FROM 15' OFFSET TO HCL AT STA. 68+50 TO 10' OFFSET TO HCL AT STA. 72+26.
2. ASPHALT JOINT ADHESIVE REQUIRED FOR ALL TOP COURSE PAVEMENT JOINTS (TRANSVERSE AND LONGITUDINAL).
3. LEFT TURN LANE ENDS AT STA. 69+18 AND TAPERS TO 0' AT STA. 69+93. FLUSH MEDIAN BEGINS AT STA. 69+18 AND TAPERS TO 0' AT STA. 72+00.
4. ITEM 404.0189 TRUING AND LEVELING TO BE USED AS A SHIM COURSE WEDGE FOR TRAFFIC A.O.B.E.

AFFIX SEAL: ON: 8/13/2025

ALTERED BY: ON:

STATE OF NEW YORK · THOMAS N. RASTANI JR. · 087842 · LICENSED PROFESSIONAL ENGINEER

D265579

AS-BUILT REVISIONS
DESCRIPTION OF ALTERATIONS:

CITY OF ROME: BLACK RIVER BLVD. ART. RTE 46-S.H. 9383

COUNTY: ONEIDA REGION: 02

PIN 2806.52
RTE 46
UTILITY QUALITY LEVEL D

BRIDGES

CULVERTS

ALL DIMENSIONS IN ft UNLESS OTHERWISE NOTED

TYPICAL SECTIONS

CONTRACT NUMBER D265579

DRAWING NO. TYP-02

SHEET NO. 7

IT IS A VIOLATION OF LAW FOR ANY PERSON, UNLESS THEY ARE ACTING UNDER THE DIRECTION OF A LICENSED PROFESSIONAL ENGINEER, ARCHITECT, LANDSCAPE ARCHITECT, OR LAND SURVEYOR, TO ALTER AN ITEM IN ANY WAY. IF AN ITEM BEARING THE STAMP OF A LICENSED PROFESSIONAL IS ALTERED, THE ALTERING ENGINEER, ARCHITECT, LANDSCAPE ARCHITECT, OR LAND SURVEYOR SHALL STAMP THE DOCUMENT AND INCLUDE THE NOTATION "ALTERED BY" FOLLOWED BY THEIR SIGNATURE, THE DATE OF SUCH ALTERATION, AND A SPECIFIC DESCRIPTION OF THE ALTERATION.

NEW YORK STATE Department of Transportation

PROJECT MANAGER THOMAS N. RASTANI JR. | CHECK ROBERT SPARACINO | DRAFTING ADAM P. KLOSNER | DESIGN RYAN FITZGERALD | JOB MANAGER THOMAS N. RASTANI JR. | DESIGN SUPERVISOR DAVID P. FACCHINI

FILE NAME = 2806.52_CPH_TYP_02.dgn
DATE/TIME = 31-JUL-2025 14:12
USER = rsparacino

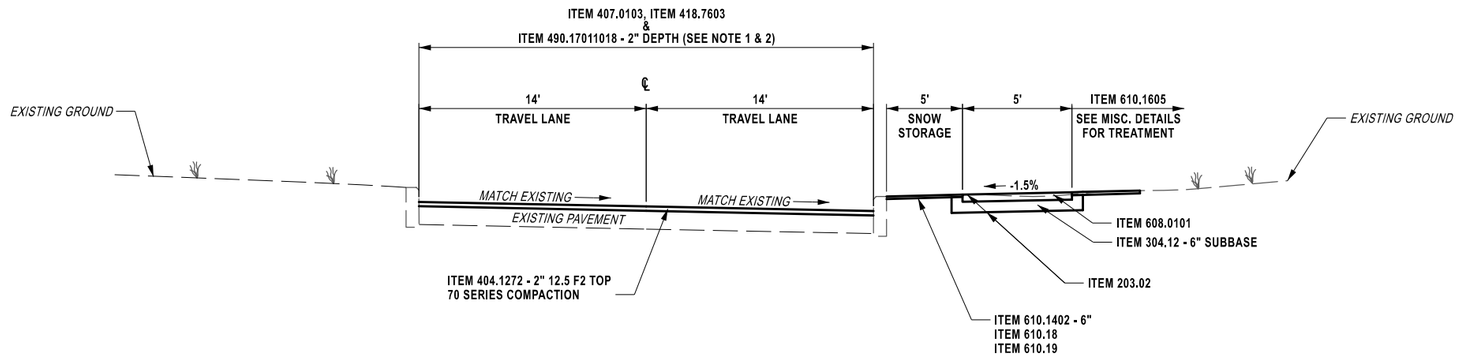

TYPICAL SECTION #6
MILL AND RESURFACING

NORTH MADISION ST.
STA. 7+90 TO STA. 9+56

(NOT TO SCALE)

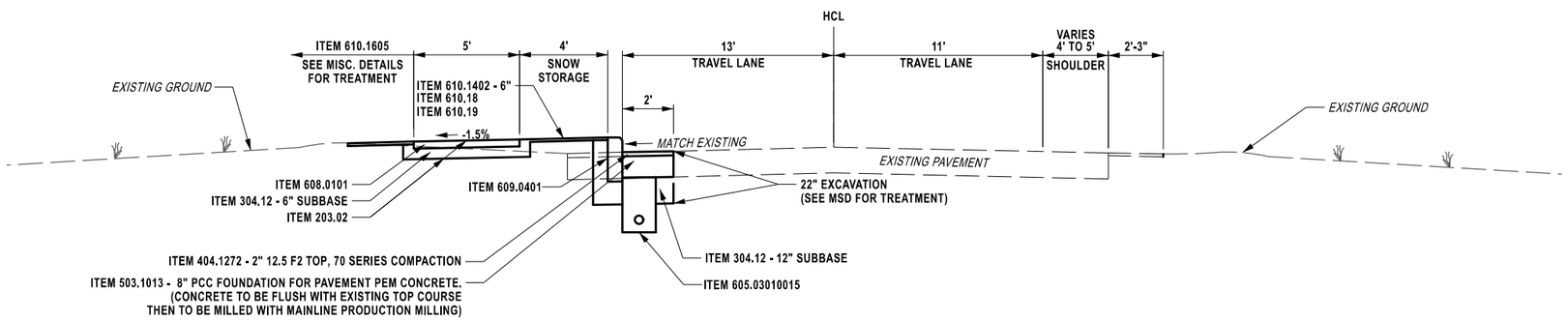

TYPICAL SECTION #5
NEW CURB AND SIDEWALK

BLACK RIVER BLVD., ROUTE 46
STA. B 74+00 TO STA. B 77+77

(NOT TO SCALE)

ITEM	DESCRIPTION	UNIT	ITEM	DESCRIPTION	UNIT
203.02	UNCLASSIFIED EXCAVATION AND DISPOSAL	CY	608.0101	CONCRETE SIDEWALKS AND DRIVEWAYS	CY
203.24010017	SHOULDER BACKUP MATERIAL	TON	609.0401	CAST-IN-PLACE CONCRETE CURB TYPE VF6	LF
304.12	SUBBASE COURSE, TYPE 2	CY	610.1402	TOPSOIL - ROADSIDE	CY
404.1272	12.5 F2 TOP COURSE ASPHALT 70 SERIES COMPACTION	TON	610.1605	TURF ESTABLISHMENT PERFORMANCE	SY
407.0103	STRAIGHT TACK COAT	GAL	610.18	SODDING	SY
418.7603	ASPHALT PAVEMENT JOINT ADHESIVE	LF	610.19	WATER VEGETATION	MGAL
490.17011018	PRODUCTION COLD MICROMILLING	SY			
503.1013	PCC FOUNDATION FOR PAVEMENT, PEM CONCRETE	CY			
605.03010015	INSTALLATION OF 4 INCH UNDERDRAIN (ALL WORK INCLUDED)	LF			

NOTES:

1. INTERSECTION PAVEMENT TREATMENT IS CONTINUOUS FROM STA 9+56 TO STA 10+56.
2. ASPHALT JOINT ADHESIVE REQUIRED FOR ALL TOP COURSE PAVEMENT JOINTS (TRANSVERSE AND LONGITUDINAL)
3. ITEM 407.0103 AND ITEM 418.7603 ARE REQUIRED IN 2' CURB BOXOUT.

AFFIX SEAL:
ON: 8/28/2025

ALTERED BY:
ON:

STATE OF NEW YORK
THOMAS N. RASTANI JR.
087842
LICENSED PROFESSIONAL ENGINEER

D265579

AS-BUILT REVISIONS
DESCRIPTION OF ALTERATIONS:

CITY OF ROME: BLACK RIVER BLVD. ART. RTE 46-S.H. 9383

COUNTY: ONEIDA REGION: 02

PIN 2806.52
RTE 46
UTILITY QUALITY LEVEL D

BRIDGES

CULVERTS

ALL DIMENSIONS IN ft UNLESS OTHERWISE NOTED

TYPICAL SECTIONS

CONTRACT NUMBER
D265579

DRAWING NO. TYP-03
SHEET NO. 8

IT IS A VIOLATION OF LAW FOR ANY PERSON, UNLESS THEY ARE ACTING UNDER THE DIRECTION OF A LICENSED PROFESSIONAL ENGINEER, ARCHITECT, LANDSCAPE ARCHITECT, OR LAND SURVEYOR, TO ALTER AN ITEM IN ANY WAY. IF AN ITEM BEARING THE STAMP OF A LICENSED PROFESSIONAL IS ALTERED, THE ALTERING ENGINEER, ARCHITECT, LANDSCAPE ARCHITECT, OR LAND SURVEYOR SHALL STAMP THE DOCUMENT AND INCLUDE THE NOTATION "ALTERED BY" FOLLOWED BY THEIR SIGNATURE, THE DATE OF SUCH ALTERATION, AND A SPECIFIC DESCRIPTION OF THE ALTERATION.

NEW YORK STATE Department of Transportation

PROJECT MANAGER THOMAS N. RASTANI JR.
CHECK ROBERT SPARACINO
DRAFTING ADAM P. KLOSNER
CHECK ROBERT SPARACINO
DESIGN RYAN FITZGERALD
JOB MANAGER THOMAS N. RASTANI JR.
DESIGN SUPERVISOR DAVID P. FACCHINI

FILE NAME = 2806.52_CPH_TYP_03.dgn
DATE/TIME = 27-AUG-2025 17:55
USER = RFitzgerald1

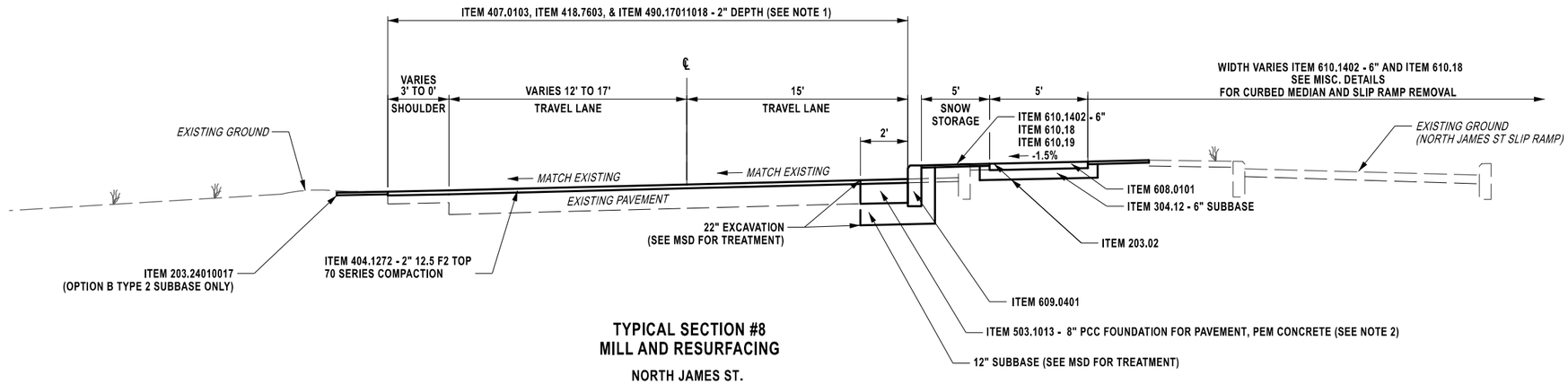

TYPICAL SECTION #8
MILL AND RESURFACING

NORTH JAMES ST.
STA. J 0+00 TO STA. J 2+00

(NOT TO SCALE)

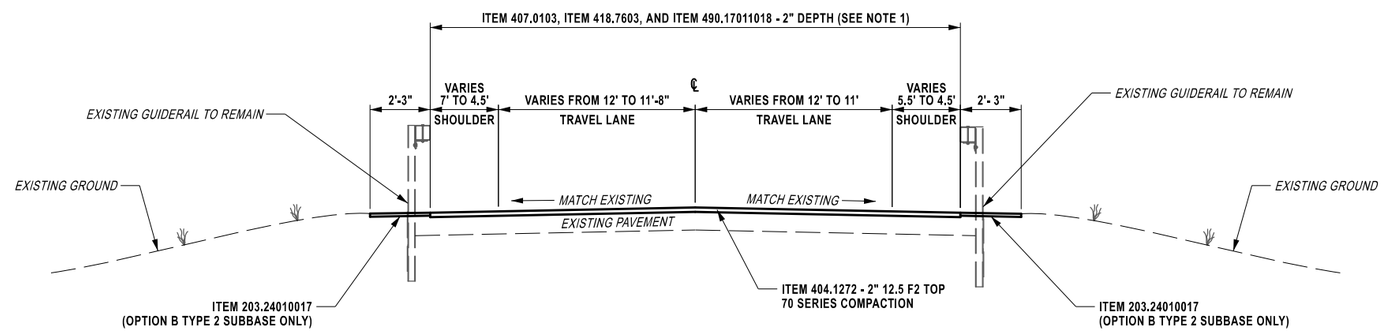

TYPICAL SECTION #7
MILL AND RESURFACING

WRIGHT SETTLEMENT ROAD
STA. 10+56 TO STA. 12+00

(NOT TO SCALE)

ITEM	DESCRIPTION	UNIT	ITEM	DESCRIPTION	UNIT
203.02	UNCLASSIFIED EXCAVATION AND DISPOSAL	CY	609.0401	CAST-IN-PLACE CONCRETE CURB TYPE VF6	LF
203.24010017	SHOULDER BACKUP MATERIAL	TON	610.1402	TOPSOIL - ROADSIDE	CY
304.12	SUBBASE COURSE, TYPE 2	CY	610.18	SODDING	SY
404.1272	12.5 F2 TOP COURSE ASPHALT, 70 SERIES COMPACTION	TON	610.19	WATER VEGETATION	MGAL
407.0103	STRAIGHT TACK COAT	GAL			
418.7603	ASPHALT PAVEMENT JOINT ADHESIVE	LF			
490.17011018	PRODUCTION COLD MICROMILLING	SY			
503.1013	PCC FOUNDATION FOR PAVEMENT, PEM CONCRETE	CY			
608.0101	CONCRETE SIDEWALKS AND DRIVEWAYS	CY			

NOTES:

1. ASPHALT JOINT ADHESIVE REQUIRED FOR ALL TOP COURSE PAVEMENT JOINTS (TRANSVERSE AND LONGITUDINAL)
2. CONCRETE TO BE FLUSH WITH EXISTING TOP COURSE THEN TO BE MILLED WITH MAINLINE PRODUCTION MILLING.

AFFIX SEAL:
ON: 8/28/2025

ALTERED BY:
ON:

STATE OF NEW YORK
THOMAS N. RASTANI JR.
087842
LICENSED PROFESSIONAL ENGINEER

D265579

AS-BUILT REVISIONS
DESCRIPTION OF ALTERATIONS:

CITY OF ROME: BLACK RIVER BLVD. ART. RTE 46-S.H. 9383

COUNTY: ONEIDA REGION: 02

PIN 2806.52
RTE 46
UTILITY QUALITY LEVEL D

BRIDGES

CULVERTS

ALL DIMENSIONS IN ft UNLESS OTHERWISE NOTED

TYPICAL SECTIONS

CONTRACT NUMBER
D265579

DRAWING NO. TYP-04
SHEET NO. 9

IT IS A VIOLATION OF LAW FOR ANY PERSON, UNLESS THEY ARE ACTING UNDER THE DIRECTION OF A LICENSED PROFESSIONAL ENGINEER, ARCHITECT, LANDSCAPE ARCHITECT, OR LAND SURVEYOR, TO ALTER AN ITEM IN ANY WAY. IF AN ITEM BEARING THE STAMP OF A LICENSED PROFESSIONAL IS ALTERED, THE ALTERING ENGINEER, ARCHITECT, LANDSCAPE ARCHITECT, OR LAND SURVEYOR SHALL STAMP THE DOCUMENT AND INCLUDE THE NOTATION "ALTERED BY" FOLLOWED BY THEIR SIGNATURE, THE DATE OF SUCH ALTERATION, AND A SPECIFIC DESCRIPTION OF THE ALTERATION.

NEW YORK STATE Department of Transportation

PROJECT MANAGER THOMAS N. RASTANI JR.
CHECK ROBERT SPARACINO
DRAFTING ADAM P. KLOSNER
CHECK ROBERT SPARACINO
DESIGN RYAN FITZGERALD
JOB MANAGER THOMAS N. RASTANI JR.
DESIGN SUPERVISOR DAVID P. FACCHINI

FILE NAME = 2806.52_CPH_TYP_04.dgn
DATE/TIME = 27-AUG-2025 17:58
USER = RFitzgerald1

TABLE OF MAINTENANCE JURISDICTION

PART NO.	HIGHWAY	℄ LIMITS	FEATURES TO BE MAINTAINED	℄ LIMITS	LANE MILES	AGENCY	AUTHORITY FOR MAINTENANCE JURISDICTION
			STATE HIGHWAY				
1	RTE. 46 (S.H. 9383)	STA 112+15 TO STA 78+50	PAVEMENT, SHOULDERS, DRAINAGE SYSTEM, LANDSCAPING, SIGNS, FENCING	0.29	0.87	STATE *	SECTION 349-C HIGHWAY LAW
1	RTE. 46 (S.H. 9383)	STA 112+15 TO STA 78+50	SIDEWALKS, LANDSCAPING, SANITARY SEWERS, LIGHTING	0.29	0.87	CITY OF ROME	SECTION 349-C HIGHWAY LAW
			INTERSECTIONS & CROSSROADS				
2	N. MADISON ST.	STA. 68+17.50	PAVEMENT, SHOULDERS, DRAINAGE	0.09	0.18	CITY OF ROME	SECTION 349-C HIGHWAY LAW
2	WRIGHT SETTLEMENT RD	STA. 68+17.50	PAVEMENT, SHOULDERS, DRAINAGE	0.04	0.08	CITY OF ROME	SECTION 349-C HIGHWAY LAW
3	N. JAMES ST.	STA. 113+23.25	PAVEMENT, SHOULDERS, DRAINAGE	0.03	0.06	CITY OF ROME	SECTION 349-C HIGHWAY LAW
4	RAZZANO AVE.	STA. 116+10.25	PAVEMENT, SHOULDERS, DRAINAGE	0.01	0.02	CITY OF ROME	SECTION 349-C HIGHWAY LAW
			STRUCTURES				
5	BRIDGE (B.I.N. 3310950) OVER MOHAWK RIVER	STA. 12+00 WRIGHT SETTLEMENT RD.	ENTIRE STRUCTURE	0.05	0.10	COUNTY	SECTION 130 HIGHWAY LAW
			TRAFFIC SIGNALS				
6	RTE. 46 (S.H. 9383)	STA. 68+17.50	TRAFFIC SIGNAL 02-26-38	N/A	N/A	CITY, BY AGREEMENT	SECTION 349-C HIGHWAY LAW
			SNOW REMOVAL				
1	RTE. 46 (S.H. 9383)	STA 112+15 TO STA 78+50	SNOW REMOVAL ON PART NO. 1	0.29	0.87	STATE *	SECTION 349-C HIGHWAY LAW
2	N. MADISON ST.	STA. 68+17.50	SNOW REMOVAL ON PART NO. 2	0.09	0.18	CITY OF ROME	SECTION 349-C HIGHWAY LAW
2	WRIGHT SETTLEMENT RD	STA. 68+17.50	SNOW REMOVAL ON PART NO. 2	0.04	0.08	CITY OF ROME	SECTION 349-C HIGHWAY LAW
3	N. JAMES ST.	STA. 113+23.25	SNOW REMOVAL ON PART NO. 3	0.03	0.06	CITY OF ROME	SECTION 349-C HIGHWAY LAW
4	RAZZANO AVE.	STA. 116+10.25	SNOW REMOVAL ON PART NO. 4	0.01	0.02	CITY OF ROME	SECTION 349-C HIGHWAY LAW

NOTE: ALL EXISTING SANITARY SEWERS AND OTHER SEWERS NOT DEEMED TO BE PART OF THE PROJECT BY THE COMMISSIONER, WATERMAINS, HYDRANTS AND OTHER MUNICIPALLY OR PRIVATELY OWNED FACILITIES WITHIN THE LIMITS OF THE HIGHWAY ROW WHICH REMAIN IN SERVICE UNCHANGED, AND ALL SUCH FACILITIES RELOCATED OR PROTECTED AS A PART OF THE WORK PERFORMED UNDER THIS PROJECT, WHETHER CROSSING, LOCATED WITHIN OR ADJACENT TO THE ROW, SHALL BE MAINTAINED AS THE CASE MAY BE, BY THE MUNICIPALITY OR BY THE AGENCY OR UNIT OWNING OR HAVING CONTROL AND JURISDICTION THEREOF AT NO COST OR EXPENSE TO THE STATE.

* CITY OF ROME BY ARTERIAL MAINTENANCE CONTRACT PURSUANT TO SUBSECTION 7.

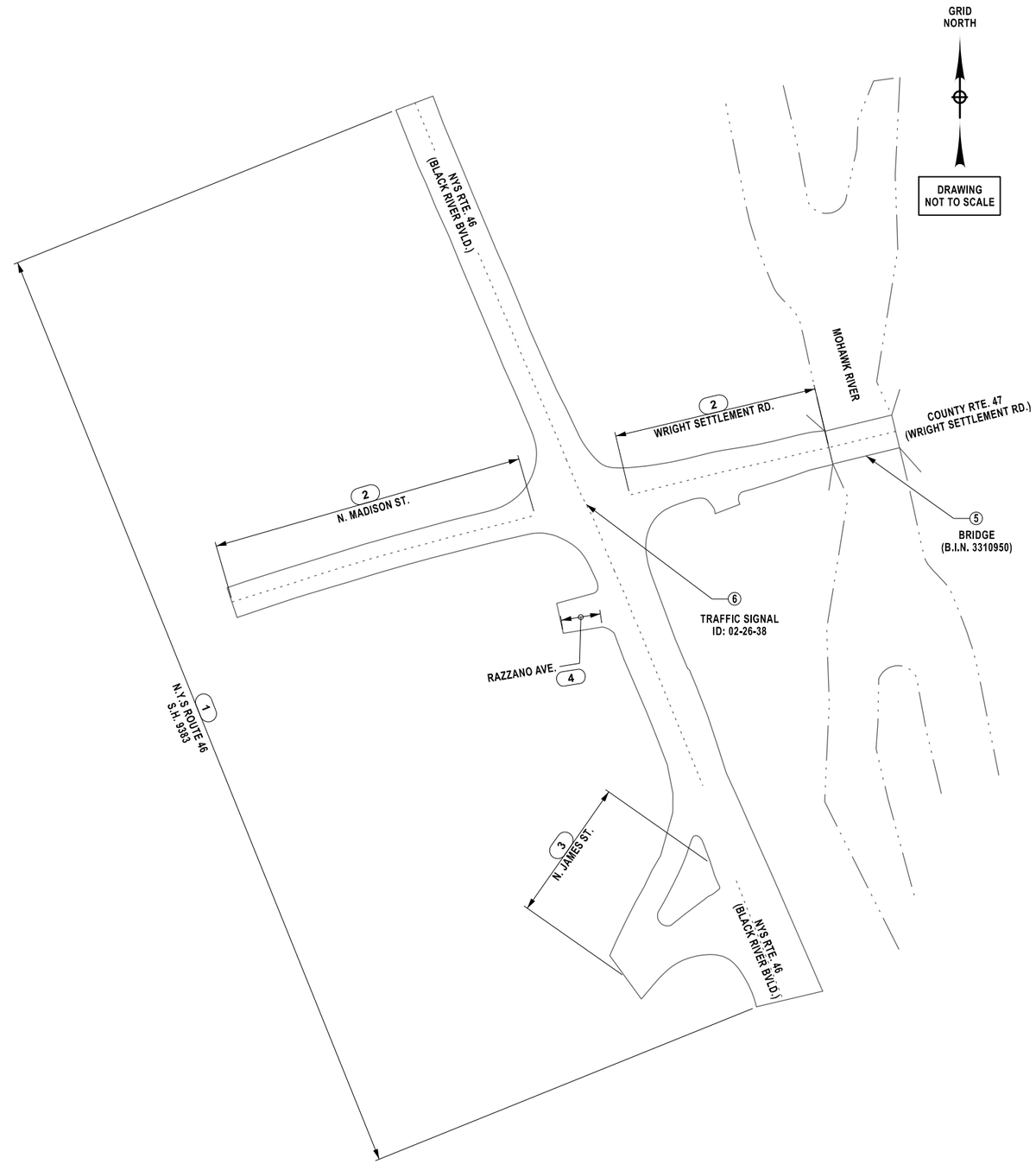

AS-BUILT REVISIONS DESCRIPTION OF ALTERATIONS:	CITY OF ROME: BLACK RIVER BLVD. ART. RTE 46-S.H. 9383 COUNTY: ONEIDA REGION: 02	PIN 2806.52 RTE 46 UTILITY QUALITY LEVEL D	BRIDGES	CULVERTS	ALL DIMENSIONS IN ft UNLESS OTHERWISE NOTED MAINTENANCE JURISDICTION PLAN

CONTRACT NUMBER D265579

DRAWING NO. MJT-01

SHEET NO. 10

NEW YORK STATE Department of Transportation

PROJECT MANAGER THOMAS N. RASTANI JR. CHECK ROBERT SPARACINO DRAFTING ADAM P. KLOSNER DESIGN RYAN FITZGERALD JOB MANAGER THOMAS N. RASTANI JR. DESIGN SUPERVISOR DAVID P. FACCHINI CHECK ROBERT SPARACINO

FILE NAME = 2806.52_CPH_MJP_01.dgn
DATE/TIME = 31-JUL-2025 14:17
USER = rsparacino

DRAINAGE NOTES

DN	STA	SIDE	DESCRIPTION		ITEM No.	203.07	204.01	206.0201	207.21	304.12	404.1979	404.3779	407.0103	552.17	603.171216	603.17161801	603.6002	603.6003	603.9818	604.070202	604.13000011	604.301873	620.04	621.03	627.50140008	646.23	646.32	655.1202	655.0706
					UNITS	CY	CY	CY	SY	CY	TON	TON	GAL	SF	EA	EA	LF	LF	LF	EA	EA	LF	CY	LF	LF	EA	EA	EA	EA
1	A 113+53.65	LT	REMOVE AND DISPOSE EXISTING DRAINAGE STRUCTURE, FRAME AND GRATE. BACK FILL WITH SELECT GRANULAR FILL TO BOTTOM OF RECONSTRUCTION LIMITS. CAP OUTLET PIPE AND FILL EXISTING PIPE WITH CONTROLLED LOW STRENGTH MATERIAL			5.87	10.18	5.87																						
2	A 113+54.06	LT	REMOVE AND DISPOSE EXISTING DRAINAGE STRUCTURE, FRAME AND GRATE. BACK FILL WITH SELECT GRANULAR FILL TO BOTTOM OF RECONSTRUCTION LIMITS. FILL EXISTING PIPE WITH CONTROLLED LOW STRENGHT MATERIAL TO DN #1			9.15	1.05	9.15																						
3	A 113+66.33	LT	INSTALL NEW TYPE R DRAINAGE STRUCTURE WITH FORMED INVERT, INSTALL F3 FRAME G3 GRATE AND CU3 CURB BOX, OUTLET WITH 121 FT OF 18" REINFORCED CONCRETE PIPE (RCP) TO OUTLET TO EXISTING DITCH. INSTALL NEW GALVANIZED STEEL END SECTION 18 INCH DIAMETER - PIPE(2 2/3" X 1/2") WITH BARS FOR 1:6 SLOPES AND INSTALL LARGE DELINEATOR (GREEN) AT OUTLET	ELEVATIONS: TG = 505.10 FT INV. IN FROM DN #5= 501.60 FT INV. OUT TO OUTLET= 501.50 FT INV. OUT AT DITCH = 501.00 FT		71.09		103.35		33.22	9.69	14.78	1.73	0		1		126				4.27			165	1	1		1
4	A 114+53.21	LT	REMOVE AND DISPOSE OF EXISTING FRAME AND GRATE, ABANDON STRUCTURE IN PLACE, CAP OUTLET RIGHT AND FILL EXISTING PIPE WITH CONTROLLED LOW STRENGHT MATERIAL				14.43														1								
5	A 114+58.48	LT	INSTALL NEW TYPE R DRAINAGE STRUCTURE WITH SCOOP AND INSTALL F3 FRAME G3 GRATE AND CU3 CURB BOX. OUTLET WITH 78 FT OF 15" SMOOTH INTERIOR CORRUGATED POLYETHYLENE CULVERT (SICPP) TO DN #3	ELEVATIONS: TG = 505.58 FT INV. OUT TO DN #3 = 502.00 FT INV. IN AT DN #3 = 501.60 FT		36.33		30.35						0			78					4.41							1
6	8+98.13	RT	REBUILD/REPAIR UP TO 3 FT IN HEIGHT, ALTER EXISTING DRAINAGE STRUCTURE AT INLET RESET EXISTING FRAME, GRATE AND CURB BOX. MATCH NEW PAVING ELEVATIONS. CLEAN EXISTING DRAINAGE STUCTURE AND CLEAN 5' OF EXISTING 18" PIPE TO DN # 7																	1				5					
7	8+98.12	RT	REBUILD/REPAIR UP TO 3 FT IN HEIGHT, ALTER EXISTING DRAINAGE STRUCTURE AT INLET RESET EXISTING MANHOLE LID AND FRAME, MATCH NEW PAVING ELEVATIONS. CLEAN EXISTING DRAINAGE STUCTURE AND CLEAN 218' OF EXISTING 18" PIPE TO DN # 9																	1				218					
8	8+96.45	LT	REBUILD/REPAIR UP TO 3 FT IN HEIGHT, ALTER EXISTING DRAINAGE STRUCTURE AT INLET RESET EXISTING FRAME, GRATE AND CURB BOX. MATCH NEW PAVING ELEVATIONS, CLEAN EXISTING DRAINAGE STUCTURE AND CLEAN 22' OF EXISTING 18" PIPE TO DN # 7																	1				22					
9	11+14.98	RT	ALTER EXISTING 24" STACKED RCP MANHOLE STRUCTURE AT INLET. INSTALL NEW MANHOLE FRAME AND COVER, MATCH NEW PAVING ELEVATIONS. CLEAN EXISTING DRAINAGE STUCTURE AND CLEAN 107 FT OF EXISTING 18" PIPE TO EXISTING OUTLET.																	1				107				1	
10	B 68+69.39	LT	INSTALL NEW TYPE R DRAINAGE STRUCTURE WITH FORMED INVERT AND INSTALL F3 FRAME G3 GRATE AND CU3 CURB BOX. OUTLET WITH 41 FT OF 18" REINFORCED CONCRETE PIPE (RCP) TO DN #11	ELEVATIONS: TG = 507.44 FT INV. IN FROM DN #12 = 503.50 FT INV. OUT TO DN #11 = 503.25 FT INV. IN AT DN #11 = 503.00 FT		30.11		45.88		11.24	3.28	5.00	0.59	0				41				5.03			67				1
			TOTALS			152.55	25.65	194.60	0.00	44.47	12.96	19.78	2.32	0	0	1.00	78	167	0	4	1	13.71	0	352	232	1	1	1	3

AFFIX SEAL: ON: 8/13/2025

ALTERED BY: ON:

STATE OF NEW YORK · THOMAS N. RASTANI JR. · 087842 · LICENSED PROFESSIONAL ENGINEER

D265579

AS-BUILT REVISIONS
DESCRIPTION OF ALTERATIONS:

CITY OF ROME: BLACK RIVER BLVD. ART. RTE 46-S.H. 9383

COUNTY: ONEIDA REGION: 02

PIN 2806.52
RTE 46
UTILITY QUALITY LEVEL D

BRIDGES

CULVERTS

ALL DIMENSIONS IN ft UNLESS OTHERWISE NOTED

MISCELLANEOUS TABLES

CONTRACT NUMBER D265579

DRAWING NO. MST-01

SHEET NO. 11

IT IS A VIOLATION OF LAW FOR ANY PERSON, UNLESS THEY ARE ACTING UNDER THE DIRECTION OF A LICENSED PROFESSIONAL ENGINEER, ARCHITECT, LANDSCAPE ARCHITECT, OR LAND SURVEYOR, TO ALTER AN ITEM IN ANY WAY. IF AN ITEM BEARING THE STAMP OF A LICENSED PROFESSIONAL IS ALTERED, THE ALTERING ENGINEER, ARCHITECT, LANDSCAPE ARCHITECT, OR LAND SURVEYOR SHALL STAMP THE DOCUMENT AND INCLUDE THE NOTATION "ALTERED BY" FOLLOWED BY THEIR SIGNATURE, THE DATE OF SUCH ALTERATION, AND A SPECIFIC DESCRIPTION OF THE ALTERATION.

NEW YORK STATE Department of Transportation

PROJECT MANAGER THOMAS N. RASTANI JR.
CHECK ROBERT SPARACINO
DRAFTING ADAM P. KLOSNER
CHECK ROBERT SPARACINO
DESIGN RYAN FITZGERALD
JOB MANAGER THOMAS N. RASTANI JR.
DESIGN SUPERVISOR DAVID P. FACCHINI
FILE NAME = 2806.52_CPH_MST_01.dgn
DATE/TIME = 31-JUL-2025 14:19
USER = rsparacino

DN	STA	SIDE	DRAINAGE NOTES DESCRIPTION		ITEM No. UNITS	203.07 CY	204.01 CY	206.0201 CY	207.21 SY	304.12 CY	404.1979 TON	404.3779 TON	407.0103	552.17 SF	603.171216 EA	603.17161801 EA	603.6002 LF	603.6003 LF	603.9818 LF	604.070202 EA	604.13000011 EA	604.301873 LF	620.04 CY	621.03 LF	627.50140008 LF	646.23 EA	646.32 EA	655.0706 EA
11	B 68+64.61	RT	INSTALL NEW TYPE R DRAINAGE STRUCTURE WITH FORMED INVERTS. INSTALL F3 FRAME G3 GRATE AND CU3 CURB BOX, OUTLET WITH 110 FT OF 18" SMOOTH INTERIOR CORRUGATED POLYETHYLENE CULVERT (SICPP) TO OUTLET AND INSTALL NEW GALVANIZED STEEL END SECTION 18 INCH DIAMETER. EXCAVATE 3' OF EXISTING MATERIAL AND BACKFILL WITH 2' OF STONE FILL (MEDIUM) AT OUTLET, INSTALL LARGE DELINEATOR (GREEN) AT OUTLET	ELEVATIONS: TG = 507.00 FT INV. IN FROM DN #10 = 503.00 FT INV. OUT TO OUTLET= 502.75 FT INV. AT OUTLET = 502.00 FT		58.05		72.72	16.67					0	1				110			5.08	11.11			1	1	1
12	B 71+31.10	LT	INSTALL NEW TYPE R DRAINAGE STRUCTURE WITH FORMED INVERT AND INSTALL F3 FRAME G3 GRATE AND CU3 CURB BOX, OUTLET WITH 258 FT OF 18" REINFORCED CONCRETE PIPE (RCP) TO DN# 10	ELEVATIONS: TG = 509.66 FT INV. IN FROM DN 13 = 505.50 FT INV. IN FROM DN 14 = 505.50 FT INV. OUT TO DN #10 = 505.25 FT INV IN AT DN #10 = 503.50 FT		135.83		135.86						1000				258				4.95						1
13	B 71+30.69	RT	INSTALL NEW TYPE R DRAINAGE STRUCTURE WITH SCOOP INVERT, INSTALL F3 FRAME G3 GRATE AND CU3 CURB BOX, OUTLET WITH 23" FT OF 15" REINFORCED CONCRETE PIPE (RCP) TO DN# 12	ELEVATIONS: TG = 509.88 FT INV. OUT TO DN # 12= 505.75 FT INV. IN AT DN #12 = 505.50 FT		17.80		25.26		5.07	2.09	3.18	0.37	0			23						4.78			40			1
14	B 73+50.74	LT	INSTALL NEW TYPE R DRAINAGE STRUCTURE WITH FORMED INVERT, INSTALL F3 FRAME G3 GRATE AND CU3 CURB BOX, OUTLET WITH 217 FT OF 18" REINFORCED CONCRETE PIPE (RCP) TO DN # 12	ELEVATIONS: TG = 511.94 FT INV. IN FROM DN # 15 = 507.75 FT INV. OUT TO DN # 12 = 507.50 FT INV. IN AT DN #12 = 505.50 FT		116.00		110.54						0				217				5.27						1
15	B 76+29.81	LT	INSTALL NEW TYPE R DRAINAGE STRUCTURE WITH SCOOP INVERT, INSTALL F3 FRAME G3 GRATE AND CU3 CURB BOX, OUTLET WITH 275 FT OF 15" REINFORCED CONCRETE PIPE (RCP) TO DN # 14	ELEVATIONS: TG = 513.44 FT INV. OUT TO DN # 14 = 509.25 FT INV. IN AT DN #14 = 507.75 FT		104.13		105.10						0			275						5.03						1
			TOTALS			431.83	0	449.47	16.67	5.07	2.09	3.18	0.37	1000	1	0.00	298	475	110	0	0	25.11	11.11	0	40	1	1	5

AFFIX SEAL: ON: 8/13/2025

ALTERED BY: ON:

STATE OF NEW YORK
THOMAS N. RASTANI JR.
087842
LICENSED PROFESSIONAL ENGINEER

D265579

AS-BUILT REVISIONS
DESCRIPTION OF ALTERATIONS:

CITY OF ROME: BLACK RIVER BLVD. ART. RTE 46-S.H. 9383

COUNTY: ONEIDA REGION: 02

PIN 2806.52
RTE 46
UTILITY QUALITY LEVEL D

BRIDGES

CULVERTS

ALL DIMENSIONS IN ft UNLESS OTHERWISE NOTED

MISCELLANEOUS TABLES

CONTRACT NUMBER D265579

DRAWING NO. MST-02

SHEET NO. 12

IT IS A VIOLATION OF LAW FOR ANY PERSON, UNLESS THEY ARE ACTING UNDER THE DIRECTION OF A LICENSED PROFESSIONAL ENGINEER, ARCHITECT, LANDSCAPE ARCHITECT, OR LAND SURVEYOR, TO ALTER AN ITEM IN ANY WAY. IF AN ITEM BEARING THE STAMP OF A LICENSED PROFESSIONAL IS ALTERED, THE ALTERING ENGINEER, ARCHITECT, LANDSCAPE ARCHITECT, OR LAND SURVEYOR SHALL STAMP THE DOCUMENT AND INCLUDE THE NOTATION "ALTERED BY" FOLLOWED BY THEIR SIGNATURE, THE DATE OF SUCH ALTERATION, AND A SPECIFIC DESCRIPTION OF THE ALTERATION.

NEW YORK STATE Department of Transportation

PROJECT MANAGER THOMAS N. RASTANI JR. CHECK ROBERT SPARACINO DRAFTING ADAM P. KLOSNER CHECK ROBERT SPARACINO DESIGN RYAN FITZGERALD CHECK ROBERT SPARACINO JOB MANAGER THOMAS N. RASTANI JR. DESIGN SUPERVISOR DAVID P. FACCHINI

FILE NAME = 2806.52_CPH_MST_02.dgn
DATE/TIME = 31-JUL-2025 14:22
USER = rsparacino

ITEM 209.0301
TABLE OF SEDIMENT FILTER LOG

STATION	TO	STATION	SIDE	LENGTH (LF)	NOTES
J 1+33.30		J 3+03.55	RT	172.20	
J 1+04.90		114+55.95	LT	152.40	NORTH JAMES SLIP RAMP
114+55.95		115+95.60	LT	151.45	
116+23.05		67+79.10	LT	47.50	
116+48.45		67+83.50	RT	39.00	
5+63.80		7+80.90	RT	244.75	
9+19.00		9+58.40	LT	45.75	
10+20.55		10+66.20	LT	70.15	
68+61.40		69+96.10	RT	135.60	
71+16.00		72+40.55	RT	127.35	
68+69.90		69+30.60	LT	62.95	
70+08.65		70+44.95	LT	36.40	
71+08.75		71+65.25	LT	60.40	
71+98.75		74+40.50	LT	257.10	
74+65.70		76+63.30	LT	235.55	SCHOOL PARKING LOT CURB LINE
76+89.25		77+73.20	LT	99.70	
115+32.70		67+85.55	RT	155.70	
TOTALS				2093.95	

PROPOSED DRIVEWAY REPLACEMENT TABLE

DRIVEWAY NO.	STATION	SIDE	USE RESIDENTIAL OR COMMERCIAL	TYPE	W(FT)	TYPE	W(FT)	TYPE	W(FT)	TYPE	W(FT)	ITEM 203.02 (CY)	ITEM 203.03 (CY)	ITEM 304.12 (CY)	ITEM 608.0101 (CY)	ITEM 608.020102 (TON)	ITEM 610.1402 (CY)	ITEM 610.1605 (SY)	ITEM 610.18 (SY)	NOTES
				Apron				Driveway												
			(R) OR (C)	EXISTING		PROPOSED		EXISTING		PROPOSED										
1	111+13.00	LT	C	ASPH	-	-	-	ASPH	-	-	-									TO REMAIN
2	111+50.00	RT	C	ASPH	-	-	-	ASPH	-	-	-									TO REMAIN
3	113+05.00	RT	C	ASPH	-	-	-	ASPH	-	-	-									TO REMAIN
4	115+00.00	RT	C	ASPH	-	-	-	ASPH	-	-	-									TO REMAIN
5	69+66.00	LT	C	ASPH	75.00	CONC	85.00	ASPH	55.00	ASPH	55.00	10.94		5.99	3.91	2.06				CLIFFS
6	70+75.00	LT	C	ASPH	57.00	CONC	74.00	ASPH	35.00	ASPH	35.00	10.30		5.77	3.28	2.46				CLIFFS
7	71+83.00	LT	C	ASPH	60.00	CONC	70.00	ASPH	31.00	ASPH	31.00	3.57		14.47	2.42	11.90				SCHOOL DR 1
8	72+58.00	RT	C	ASPH	-	-	-	ASPH	-	-	-									MAZZAFERRO DR 1
9	74+53.00	LT	C	ASPH	64.00	CONC	73.00	ASPH	24.00	ASPH	24.00	7.33		19.48	4.61	14.69				SCHOOL DR 2
10	74+69.00	RT	C	ASPH	-	-	-	ASPH	-	-	-									MAZZAFERRO DR 2
11	75+45.00	RT	C	ASPH	-	-	-	ASPH	-	-	-									MAZZAFERRO DR 3
12	76+15.00	RT	C	ASPH	-	-	-	ASPH	-	-	-									MAZZAFERRO DR 4
13	76+76.00	LT	C	ASPH	54.00	CONC	67.00	ASPH	24.00	ASPH	24.00	5.54		21.29	4.13	16.95				SCHOOL DR 3
14	77+47.00	RT	C	ASPH	-	-	-	ASPH	-	-	-									MAZZAFERRO DR 5
15	77+95.00	LT	C	ASPH	-	-	-	ASPH	-	-	-									MEDICAL FACILITY DR
16	8+23.00	RT	C	ASPH	22.00	CONC	49.00	ASPH	30.00	ASPH	39.00	19.69		11.77	4.06	7.62				MADISON ST - TO BE WIDENED
17	8+63.00	RT	C	ASPH	21.00	-	-	ASPH	30.00	-	-	12.10	6.05				3.08	17.81	18.50	TO BE REMOVED
18	8+75.00	LT	C	ASPH	55.00	-	-	ASPH	37.00	-	-									TO REMAIN
19	10+80.00	LT	R	STONE	33.00	-	-	STONE	20.00	-	-									TO REMAIN
20	11+21.00	RT	C	ASPH	31.00	-	-	ASPH	23.00	-	-									TO REMAIN
21	1+40.00	LT	C	STONE	50.00	-	-	STONE	50.0	-	-									TO REMAIN
22	1+19.00	RT	C	STONE	118.00	CONC	57.00	STONE	89.00	ASPH	31.00	42.97	14.32	12.74	1.52	11.08				N JAMES ST - PALISADES
											TOTAL	**112.45**	**20.38**	**91.52**	**23.93**	**66.76**	**3.08**	**17.81**	**18.50**	

PROPERTY RELEASES

STATION	SIDE	HOUSE #	PROPERTY OWNER(S)	COMMENTS, INCLUDE PURPOSE	DATE SIGNED
71+16.00 TO 77+18.00	LEFT	7841	RIDGE MILLS ELEMENTARY	RE-ESTABLISH DRIVEWAYS & TURF	7/2/2025

ADA REPORTING - TABLE OF SIDEWALKS

SIDEWALK

ROADWAY	STATION	TO	STATION	SIDE	STARTING COORDINATES WGS 84 - D.D. LATITUDE	LONGITUDE	ENDING COORDINATES WGS 84 - D.D. LATITUDE	LONGITUDE	NON-STANDARD FEATURE	LENGTH FT.	(AVG.) WIDTH FT.	COMMENTS
N. JAMES ST./NYS RTE. 46/N. MADISON ST	J 2+93.00		5+85.00	LT/RT	43.238712°	-75.437558°	43.239890°	-75.438786°	NO	1,020.00	5.00	
NYS RTE. 46	B 68+39.67		B 68+60.44	RT	43.240346°	-75.437141°	43.240383°	-75.437234°	NO	28.50	5.00	
NYS RTE. 46	B 68+58.73		B 77+60.45	LT	43.240305°	-75.437476°	43.242653°	-75.438732°	NO	924.00	5.00	

ITEM 203.24010017
TABLE OF SHOULDER BACKUP MATERIAL

STATION	TO	STATION	SIDE	LENGTH FT.
RTE. 46				
111+85.92		112+64.15	LT	78.23
112+42.10		112+80.98	RT	38.88
115+32.54		67+85.56	RT	171.00
72+91.02		74+13.88	RT	122.86
WRIGHT SETTLEMENT RD				
10+64.10		12+00.00	LT	135.90
10+56.58		12+00.00	RT	143.42
NORTH JAMES ST				
J 0+31.48		J 0+87.39	LT	55.91
TOTALS				746.20

ADA REPORTING - TABLE OF CURB RAMPS

CURB RAMPS

ROADWAY	RAMP #	SIDE	COORDINATES WGS 84 - D.D. LATTITUDE	LONGITUDE	TYPE	NEW OR REPLACEMENT	NON-STANDARD FEATURE	NOTES
NYS RTE. 46	01	LT	43.239323°	-75.436876°	3	NEW	NO	
NYS RTE. 46	02	LT	43.239946°	-75.437218°	1	NEW	NO	
NYS RTE. 46	03	LT	43.240026°	-75.437261°	1	NEW	NO	
NYS RTE. 46/N. MADISON ST.	04	LT	43.240137°	-75.437310°	1	NEW	NO	
NYS RTE. 46/N. MADISON ST.	05	LT	43.240176°	-75.437397°	1	NEW	NO	
NYS RTE. 46/WRIGHT SETTLEMENT RD.	06	RT	43.240202°	-75.437063°	1	NEW	NO	
NYS RTE. 46/WRIGHT SETTLEMENT RD.	07	RT	43.240340°	-75.437146°	1	NEW	NO	
NYS RTE. 46/WRIGHT SETTLEMENT RD.	08	RT	43.240378°	-75.437243°	1	NEW	NO	
NYS RTE. 46/N. MADISON ST.	09	LT	43.240305°	-75.437472°	1	NEW	NO	
NYS RTE. 46	10	LT	43.242643°	-75.438731°	1	NEW	NO	
N. MADISON ST./ROSENBURG RD.	11	RT	43.239882°	-75.438776°	1	NEW	NO	
N. JAMES ST./ROSENBURG RD.	12	RT	43.238721°	-75.437553°	1	NEW	NO	

AFFIX SEAL: ON: 8/13/2025

ALTERED BY: ON:

STATE OF NEW YORK · THOMAS N. RASTANI JR. · 087842 · LICENSED PROFESSIONAL ENGINEER

D265579

AS-BUILT REVISIONS
DESCRIPTION OF ALTERATIONS:

CITY OF ROME: BLACK RIVER BLVD. ART. RTE 46-S.H. 9383

COUNTY: ONEIDA REGION: 02

PIN 2806.52
RTE 46
UTILITY QUALITY LEVEL D

BRIDGES

CULVERTS

ALL DIMENSIONS IN ft UNLESS OTHERWISE NOTED

MISCELLANEOUS TABLES

CONTRACT NUMBER D265579

DRAWING NO. MST-03

SHEET NO. 13

IT IS A VIOLATION OF LAW FOR ANY PERSON, UNLESS THEY ARE ACTING UNDER THE DIRECTION OF A LICENSED PROFESSIONAL ENGINEER, ARCHITECT, LANDSCAPE ARCHITECT, OR LAND SURVEYOR, TO ALTER AN ITEM IN ANY WAY. IF AN ITEM BEARING THE STAMP OF A LICENSED PROFESSIONAL IS ALTERED, THE ALTERING ENGINEER, ARCHITECT, LANDSCAPE ARCHITECT, OR LAND SURVEYOR SHALL STAMP THE DOCUMENT AND INCLUDE THE NOTATION "ALTERED BY" FOLLOWED BY THEIR SIGNATURE, THE DATE OF SUCH ALTERATION, AND A SPECIFIC DESCRIPTION OF THE ALTERATION.

NEW YORK STATE Department of Transportation

DESIGN SUPERVISOR DAVID P. FACCHINI · JOB MANAGER THOMAS N. RASTANI JR. · DESIGN RYAN FITZGERALD · CHECK ROBERT SPARACINO · DRAFTING ADAM P. KLOSNER · CHECK ROBERT SPARACINO · PROJECT MANAGER THOMAS N. RASTANI JR.

FILE NAME = 2806.52_CPH_MST_03.dgn
DATE/TIME = 31-JUL-2025 14:25
USER = rsparacino

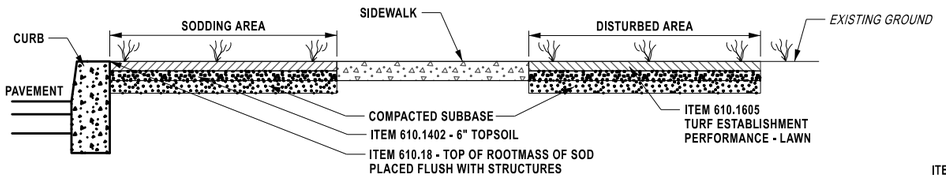

SODDING DETAIL
SECTION A-A VIEW
(NOT TO SCALE)

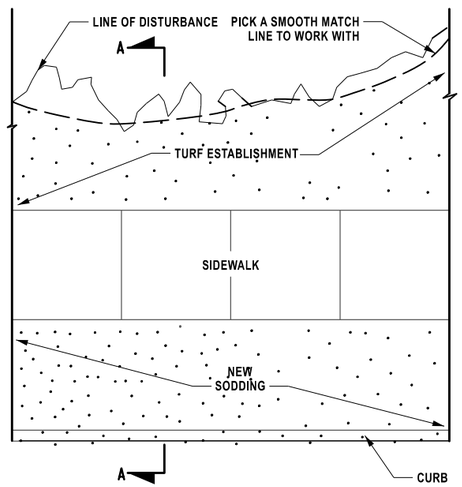

SODDING DETAIL
PLAN VIEW
(NOT TO SCALE)

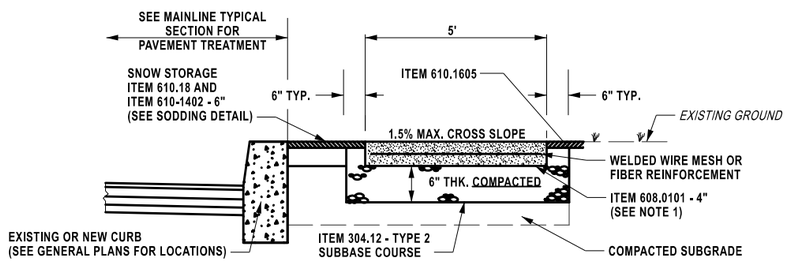

NOTE: 1.) ITEM 608.0101 - 6" DEPTH ACROSS ALL DRIVEWAYS
2.) SEE GENERAL PLANS & DETAILS FOR LOCATIONS

NEW SIDEWALK DETAIL
(NOT TO SCALE)

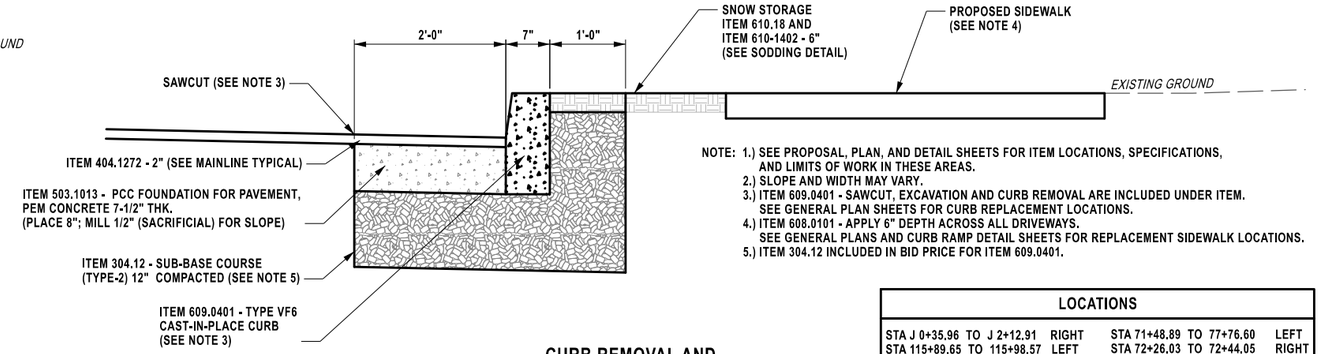

NOTE: 1.) SEE PROPOSAL, PLAN, AND DETAIL SHEETS FOR ITEM LOCATIONS, SPECIFICATIONS, AND LIMITS OF WORK IN THESE AREAS.
2.) SLOPE AND WIDTH MAY VARY.
3.) ITEM 609.0401 - SAWCUT, EXCAVATION AND CURB REMOVAL ARE INCLUDED UNDER ITEM. SEE GENERAL PLAN SHEETS FOR CURB REPLACEMENT LOCATIONS.
4.) ITEM 608.0101 - APPLY 6" DEPTH ACROSS ALL DRIVEWAYS. SEE GENERAL PLANS AND CURB RAMP DETAIL SHEETS FOR REPLACEMENT SIDEWALK LOCATIONS.
5.) ITEM 304.12 INCLUDED IN BID PRICE FOR ITEM 609.0401.

CURB REMOVAL AND REPLACEMENT DETAIL
(FOR LOCATIONS WITH 2.0 FT BOXOUT MAX)
(NOT TO SCALE)

LOCATIONS					
STA J 0+35.96	TO	J 2+12.91	RIGHT	STA 71+48.89 TO 77+76.60	LEFT
STA 115+89.65	TO	115+98.57	LEFT	STA 72+26.03 TO 72+44.05	RIGHT
STA 116+19.57	TO	116+28.64	LEFT	STA 7+96.60 TO 8+81.86	RIGHT
STA 116+48.88	TO	9+44.93	LEFT	STA 5+60.87 TO 5+93.88	RIGHT
STA 9+16.97	TO	68+98.88	LEFT		

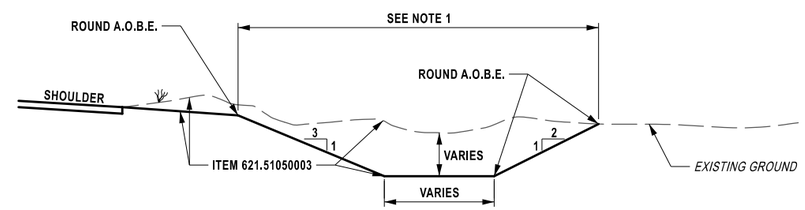

NOTES: 1.) ITEM 621.51050003 - SEEDING INCLUDED IN ACCORDANCE WITH SECTION 610-2.03 ESTABLISHING TURF

ITEM 621.51050003
GRADING MAINTENANCE, CLEANING, TRIMMING AND RESHAPING EXISTING ROADSIDE SECTION DETAIL
(NOT TO SCALE)

LOCATIONS					
STA 111+45.00	TO	112+65.00	LEFT	STA 111+74.00 TO 112+54.00	RIGHT

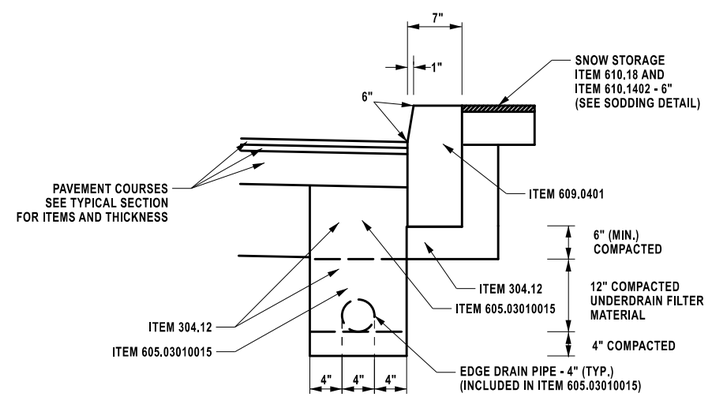

CURB AND UNDERDRAIN
(FOR RECONSTRUCTION LOCATIONS 2FT OR GREATER)
(NOT TO SCALE)

LOCATIONS
RTE 46 SOUTH LEG - WIDENING AREA #1 STA. 113+66 TO STA. 9+47 LEFT
RTE 46 NORTH LEG - WIDENING AREA #2 STA. 9+19 TO STA. 71+49 LEFT
RTE 46 NORTH LEG - WIDENING AREA #3 STA. 10+66 TO STA. 72+26 RIGHT
RTE 46 NORTH LEG - SIDEWALK EXTENSION STA. 71+49 TO STA. 77+56 LEFT

AFFIX SEAL: ON: 8/13/2025
ALTERED BY: ON:

STATE OF NEW YORK · THOMAS N. RASTANI JR. · 087842 · LICENSED PROFESSIONAL ENGINEER

D265579

AS-BUILT REVISIONS
DESCRIPTION OF ALTERATIONS:

CITY OF ROME: BLACK RIVER BLVD. ART. RTE 46-S.H. 9383
COUNTY: ONEIDA REGION: 02

PIN 2806.52
RTE 46
UTILITY QUALITY LEVEL D

BRIDGES | CULVERTS

ALL DIMENSIONS IN ft UNLESS OTHERWISE NOTED

MISCELLANEOUS DETAILS

CONTRACT NUMBER D265579
DRAWING NO. MSD-01
SHEET NO. 14

IT IS A VIOLATION OF LAW FOR ANY PERSON, UNLESS THEY ARE ACTING UNDER THE DIRECTION OF A LICENSED PROFESSIONAL ENGINEER, ARCHITECT, LANDSCAPE ARCHITECT, OR LAND SURVEYOR, TO ALTER AN ITEM IN ANY WAY. IF AN ITEM BEARING THE STAMP OF A LICENSED PROFESSIONAL IS ALTERED, THE ALTERING ENGINEER, ARCHITECT, LANDSCAPE ARCHITECT, OR LAND SURVEYOR SHALL STAMP THE DOCUMENT AND INCLUDE THE NOTATION "ALTERED BY" FOLLOWED BY THEIR SIGNATURE, THE DATE OF SUCH ALTERATION, AND A SPECIFIC DESCRIPTION OF THE ALTERATION.

NEW YORK STATE Department of Transportation

DESIGN SUPERVISOR DAVID P. FACCHINI
JOB MANAGER THOMAS N. RASTANI JR.
DESIGN RYAN FITZGERALD
CHECK ROBERT SPARACINO
DRAFTING ADAM P. KLOSNER
CHECK ROBERT SPARACINO
PROJECT MANAGER THOMAS N. RASTANI JR.
FILE NAME = 2806.52_CPH_MSD_01.dgn
DATE/TIME = 31-JUL-2025 14:27
USER = rsparacino

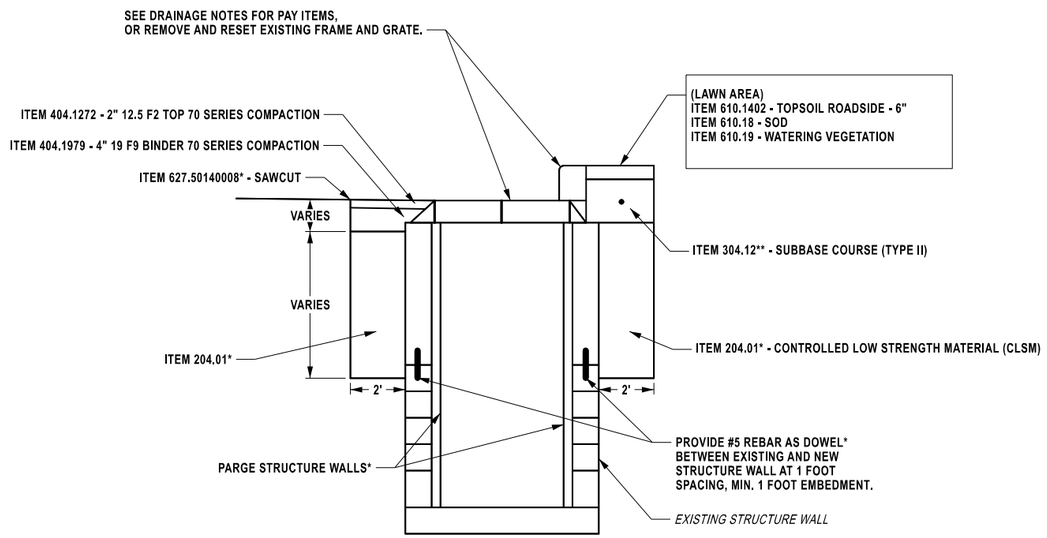

ITEM 604.0702XX ALTERING CATCH BASIN, MANHOLE, OR DROP INLET
(NOT TO SCALE)
(SEE DRAINAGE NOTE TABLES FOR LOCATIONS)

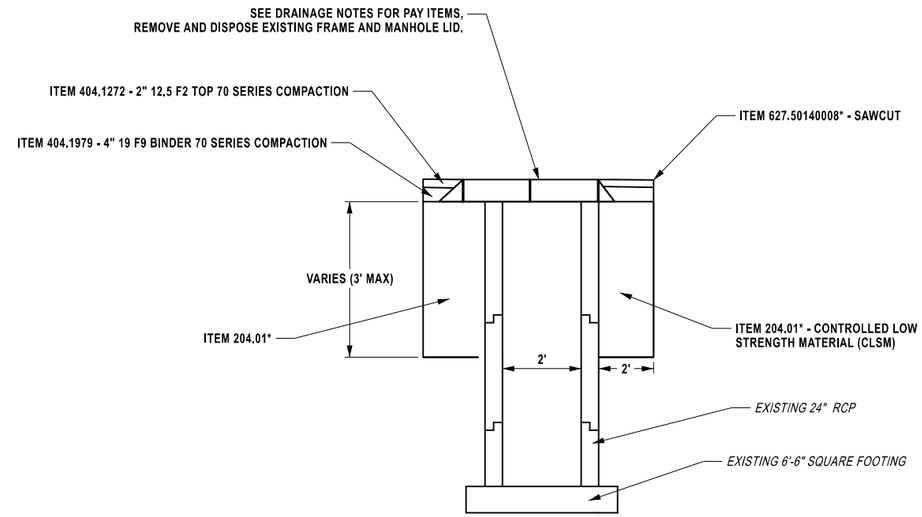

ITEM 604.070202 ALTERING MANHOLE
(NOT TO SCALE)
(SEE DRAINAGE NOTE 9)

ITEM NUMBER	DESCRIPTION OF WORK
ITEM 604.070202	REBUILD STRUCTURE (CATCH BASIN, MANHOLE OR DROP INLET) UP TO 3.0 FT IN HEIGHT, CLEAN, REPAIR LOOSE MATERIAL AS NECESSARY, PARGE AND RESET OR REPLACE FRAME & GRATE

*ITEM NUMBERS SHOWN AS A DESCRIPTION OF THE WORK ONLY.
PAYMENT FOR THESE ITEMS SHALL BE INCLUDED IN THE BID
PRICE FOR THE ITEM 604.0702XX, ALTERING DRAINAGE STRUCTURES.

NOTES:

1. THE ALTERING DRAINAGE STRUCTURE ITEM, 604.0702XX, SHALL INCLUDE ALL OF THE DESCRIBED WORK.
   NO SEPARATE PAYMENT WILL BE MADE FOR THESE ITEMS, WITH THE EXCEPTION OF NEW FRAMES & GRATES OR MANHOLE COVERS.
2. THE CONTRACTOR SHALL HAVE THE OPTION OF REPLACING EXISTING DETERIORATED STRUCTURE WALLS WITH
   RECAST CONCRETE UNITS, MEETING THE REQUIREMENTS OF SECTION 706-04 OF THE STANDARD SPECIFICATIONS,
   OR CLASS A STRUCTURAL CAST-IN-PLACE CONCRETE, MEETING THE REQUIREMENTS OF SECTION 555 OF THE STANDARD SPECIFICATIONS.
   BAR REINFORCEMENT SHALL BE PROVIDED AND APPROVED BY THE ENGINEER.
3. STRUCTURE TYPES ARE ASSUMED BASED UPON RECORD PLANS AND PRELIMINARY FIELD VERIFICATION.
   IT IS THE RESPONSIBILITY OF THE CONTRACTOR TO FIELD VERIFY ALL ELEVATIONS AND THE STRUCTURE TYPE PRIOR TO PERFORMING
   THE ALTER TO CONFIRM THE PROPER TREATMENT. ALL ALTERS SHALL BE COMPLETED AS DETAILED IN THE CONTRACT PLANS,
   IN ACCORDANCE WITH APPLICABLE STANDARDS AND A.O.B.E.
4. MATCH EXISTING PAVEMENT DEPTH AND TYPE
5. IT SHALL BE THE RESPONSIBILITY OF THE CONTRACTOR TO USE CARE & CAUTION WHEN ALTERING EXISTING MASONRY CONSTRUCTED STRUCTURES.
   IT SHALL BE THE RESPONSIBILITY OF THE CONTRACTOR TO REPAIR ALL DAMAGE CAUSED BY WORKER ERROR OR NEGLIGENCE AT NO COST TO THE STATE OF NEW YORK.
6. ALL STRUCTURES AND SANITARY MANHOLES SHALL BE CLEANED OF DEBRIS UPON COMPLETION OF THE WORK PERFORMED.
   COST SHALL BE INCLUDED IN THE BID PRICE FOR ITEM 604.0702YY

AFFIX SEAL: ON: 8/13/2025

STATE OF NEW YORK
THOMAS N. RASTANI JR.
087842
LICENSED PROFESSIONAL ENGINEER

D265579

ALTERED BY:
ON:

AS-BUILT REVISIONS
DESCRIPTION OF ALTERATIONS:

CITY OF ROME: BLACK RIVER BLVD. ART. RTE 46-S.H. 9383

COUNTY: ONEIDA REGION: 02

PIN 2806.52
RTE 46
UTILITY QUALITY LEVEL D

BRIDGES

CULVERTS

ALL DIMENSIONS IN ft UNLESS OTHERWISE NOTED

MISCELLANEOUS DETAILS

CONTRACT NUMBER
D265579

DRAWING NO. MSD-02
SHEET NO. 15

IT IS A VIOLATION OF LAW FOR ANY PERSON, UNLESS THEY ARE ACTING UNDER THE DIRECTION OF A LICENSED PROFESSIONAL ENGINEER, ARCHITECT, LANDSCAPE ARCHITECT, OR LAND SURVEYOR, TO ALTER AN ITEM IN ANY WAY. IF AN ITEM BEARING THE STAMP OF A LICENSED PROFESSIONAL IS ALTERED, THE ALTERING ENGINEER, ARCHITECT, LANDSCAPE ARCHITECT, OR LAND SURVEYOR SHALL STAMP THE DOCUMENT AND INCLUDE THE NOTATION "ALTERED BY" FOLLOWED BY THEIR SIGNATURE, THE DATE OF SUCH ALTERATION, AND A SPECIFIC DESCRIPTION OF THE ALTERATION.

NEW YORK STATE Department of Transportation

PROJECT MANAGER THOMAS N. RASTANI JR.
CHECK ROBERT SPARACINO
DRAFTING ADAM P. KLOSNER
CHECK ROBERT SPARACINO
DESIGN RYAN FITZGERALD
JOB MANAGER THOMAS N. RASTANI JR.
DESIGN SUPERVISOR DAVID P. FACCHINI
FILE NAME = 2806.52_CPH_MSD_02.dgn
DATE/TIME = 31-JUL-2025 14:29
USER = rsparacino

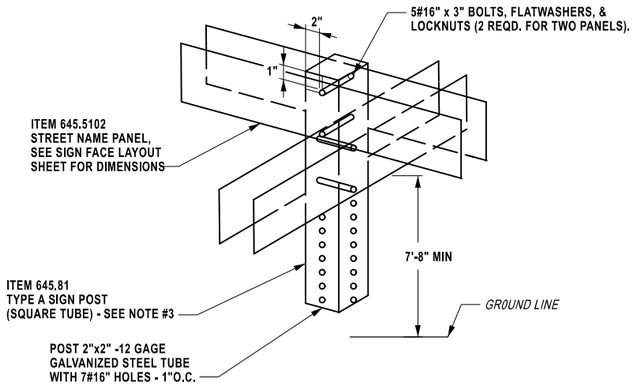

SQUARE TUBE SIGN POST
STREET SIGN CONSTRUCTION DETAIL

(NOT TO SCALE)

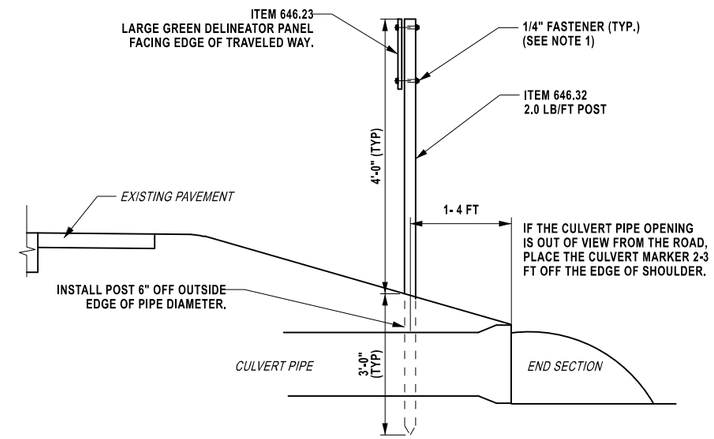

CULVERT MARKER DETAIL
(WITHOUT GUIDERAIL)

(NOT TO SCALE)

NOTES: 1.) DELINEATORS, REFERENCE MARKERS, CIN MARKERS AND SNOW PLOWING MARKERS SHALL BE ATTACHED TO POSTS AND BRACKETS USING ¼" FASTENERS SUCH AS LOCK BOLTS, PULL THROUGH OR DRIVE BLIND RIVETS, OR OTHER FASTENERS AS APPROVED.

2.) REFERENCE MARKER PANELS ITEM 646.21, MAY BE PLACED ON DELINEATOR POSTS AS APPROPRIATE.

3.) ANY ADDITIONAL MOUNTING HARDWARE REQUIRED FOR DOUBLE MOUNTING OF CHEVRON PANELS ON A SINGLE SQUARE TUBE POST SHALL BE INCLUDED IN THE COST OF ITEM 645.81.

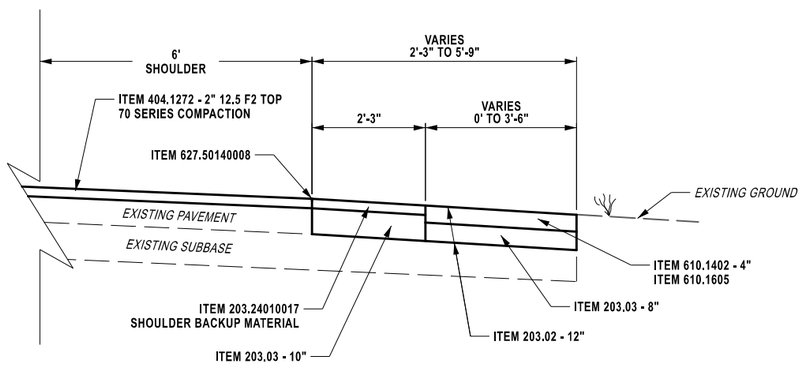

NOTE: 1.) ITEM 627.50140008 SAWCUT SHALL BE ALONG THE NEWLY PROPOSED PAVED EDGE LINE.

SHOULDER REMOVAL DETAIL
ROUTE 46 & WRIGHT SETTLEMENT RD. - SE QUAD
STA. 115+33 TO STA. 67+86 RIGHT

(NOT TO SCALE)

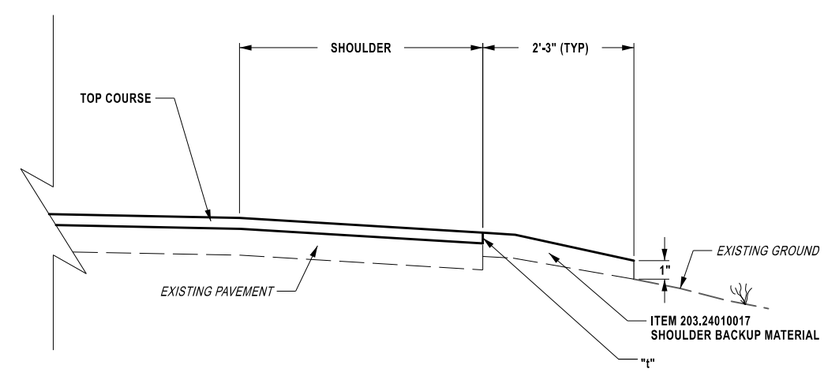

NOTE: 1.) PLACEMENT OF ITEM 203.24010017 SHALL BE ALONG OVERLAYED ASPHALT AREAS, INCLUDING GUIDE RAIL SECTIONS.
2.) "t" IS THE THICKNESS OF THE NEW EXPOSED PAVEMENT AT THE EDGE OF SHOULDER, SHOULDER BACK UP IS NEEDED IF "t" IS 1" OR GREATER.
3.) STEP 4" FOR ASPHALT LIFTS 2" OR GREATER IN THICKNESS

SHOULDER BACKUP & PAVEMENT EDGE DETAIL

(NOT TO SCALE)

AFFIX SEAL: ON: 8/13/2025

ALTERED BY: ON:

STATE OF NEW YORK · THOMAS N. RASTANI JR. · 087842 · LICENSED PROFESSIONAL ENGINEER

D265579

AS-BUILT REVISIONS
DESCRIPTION OF ALTERATIONS:

CITY OF ROME: BLACK RIVER BLVD. ART. RTE 46-S.H. 9383

COUNTY: ONEIDA REGION: 02

PIN 2806.52
RTE 46
UTILITY QUALITY LEVEL D

BRIDGES

CULVERTS

ALL DIMENSIONS IN ft UNLESS OTHERWISE NOTED

MISCELLANEOUS DETAILS

CONTRACT NUMBER D265579

DRAWING NO. MSD-03

SHEET NO. 16

IT IS A VIOLATION OF LAW FOR ANY PERSON, UNLESS THEY ARE ACTING UNDER THE DIRECTION OF A LICENSED PROFESSIONAL ENGINEER, ARCHITECT, LANDSCAPE ARCHITECT, OR LAND SURVEYOR, TO ALTER AN ITEM IN ANY WAY. IF AN ITEM BEARING THE STAMP OF A LICENSED PROFESSIONAL IS ALTERED, THE ALTERING ENGINEER, ARCHITECT, LANDSCAPE ARCHITECT, OR LAND SURVEYOR SHALL STAMP THE DOCUMENT AND INCLUDE THE NOTATION "ALTERED BY" FOLLOWED BY THEIR SIGNATURE, THE DATE OF SUCH ALTERATION, AND A SPECIFIC DESCRIPTION OF THE ALTERATION.

NEW YORK STATE Department of Transportation

PROJECT MANAGER THOMAS N. RASTANI JR.
CHECK ROBERT SPARACINO
DRAFTING ADAM P. KLOSNER
CHECK ROBERT SPARACINO
DESIGN RYAN FITZGERALD
JOB MANAGER THOMAS N. RASTANI JR.
DESIGN SUPERVISOR DAVID P. FACCHINI

FILE NAME = 2806.52_CPH_MSD_03.dgn
DATE/TIME = 31-JUL-2025 14:30
USER = rsparacino

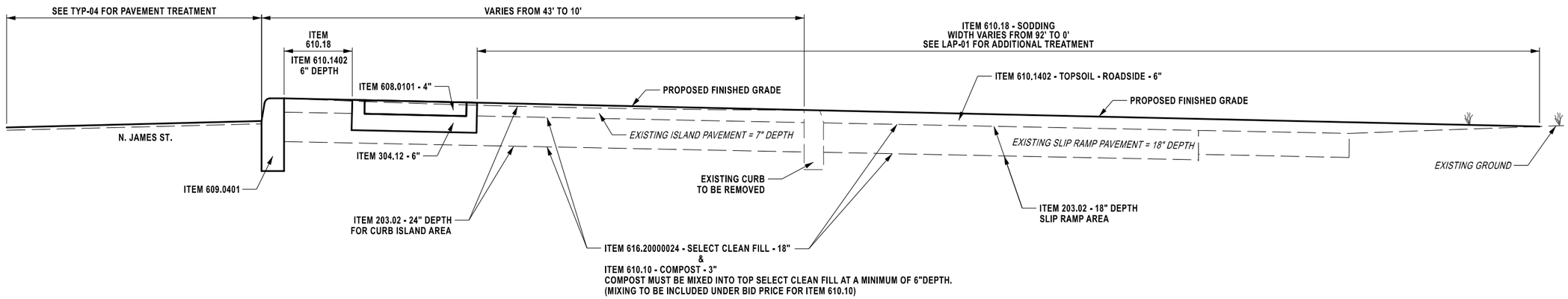

N. JAMES STREET
SLIP RAMP REMOVAL DETAIL

CROSS SECTION A-A

N. JAMES ST.
STA. J 0+00 TO STA. J 0+73

(NOT TO SCALE)

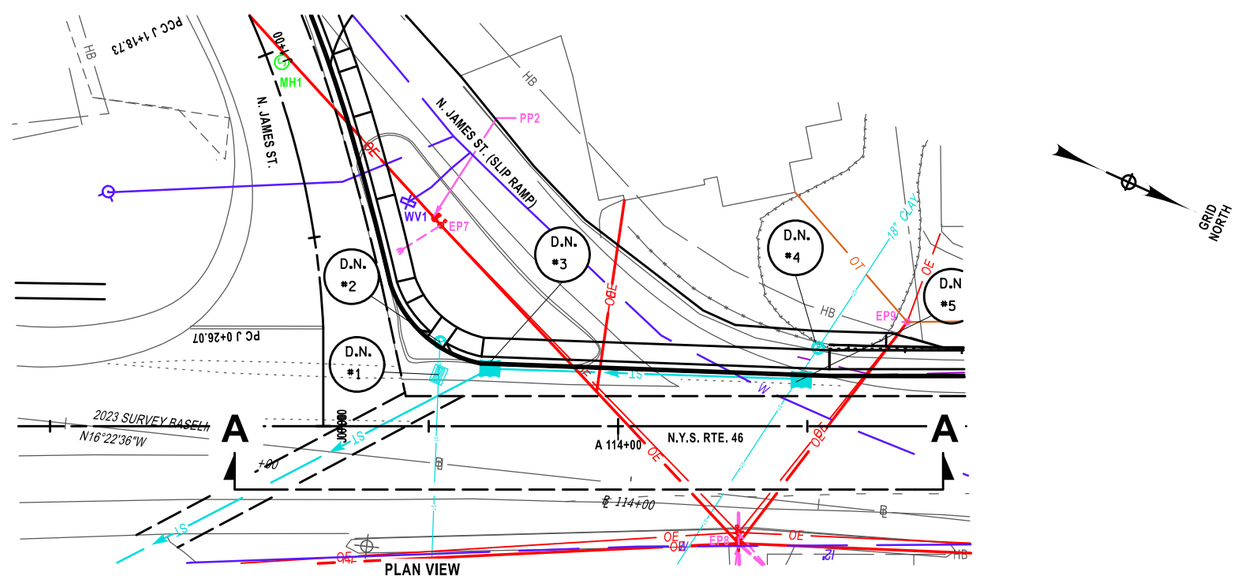

PLAN VIEW

N. JAMES ST.
STA. J 0+00 TO STA. J 0+73

(NOT TO SCALE)

AS-BUILT REVISIONS DESCRIPTION OF ALTERATIONS:	CITY OF ROME: BLACK RIVER BLVD. ART. RTE 46-S.H. 9383 COUNTY: ONEIDA REGION: 02	PIN 2806.52 RTE 46 UTILITY QUALITY LEVEL D	BRIDGES	CULVERTS	ALL DIMENSIONS IN ft UNLESS OTHERWISE NOTED MISCELLANEOUS DETAILS	CONTRACT NUMBER D265579 DRAWING NO. MSD-04 SHEET NO. 17

AFFIX SEAL: ON: 8/13/2025

ALTERED BY: ON:

STATE OF NEW YORK
THOMAS N. RASTANI JR.
087842
LICENSED PROFESSIONAL ENGINEER

D265579

IT IS A VIOLATION OF LAW FOR ANY PERSON, UNLESS THEY ARE ACTING UNDER THE DIRECTION OF A LICENSED PROFESSIONAL ENGINEER, ARCHITECT, LANDSCAPE ARCHITECT, OR LAND SURVEYOR, TO ALTER AN ITEM IN ANY WAY. IF AN ITEM BEARING THE STAMP OF A LICENSED PROFESSIONAL IS ALTERED, THE ALTERING ENGINEER, ARCHITECT, LANDSCAPE ARCHITECT, OR LAND SURVEYOR SHALL STAMP THE DOCUMENT AND INCLUDE THE NOTATION "ALTERED BY" FOLLOWED BY THEIR SIGNATURE, THE DATE OF SUCH ALTERATION, AND A SPECIFIC DESCRIPTION OF THE ALTERATION.

NEW YORK STATE Department of Transportation

PROJECT MANAGER THOMAS N. RASTANI JR.
CHECK ROBERT SPARACINO
DRAFTING ADAM P. KLOSNER
CHECK ROBERT SPARACINO
DESIGN RYAN FITZGERALD
JOB MANAGER THOMAS N. RASTANI JR.
DESIGN SUPERVISOR DAVID P. FACCHINI

FILE NAME = 2806.52_CPH_MSD_04.dgn
DATE/TIME = 31-JUL-2025 14:32
USER = rsparacino

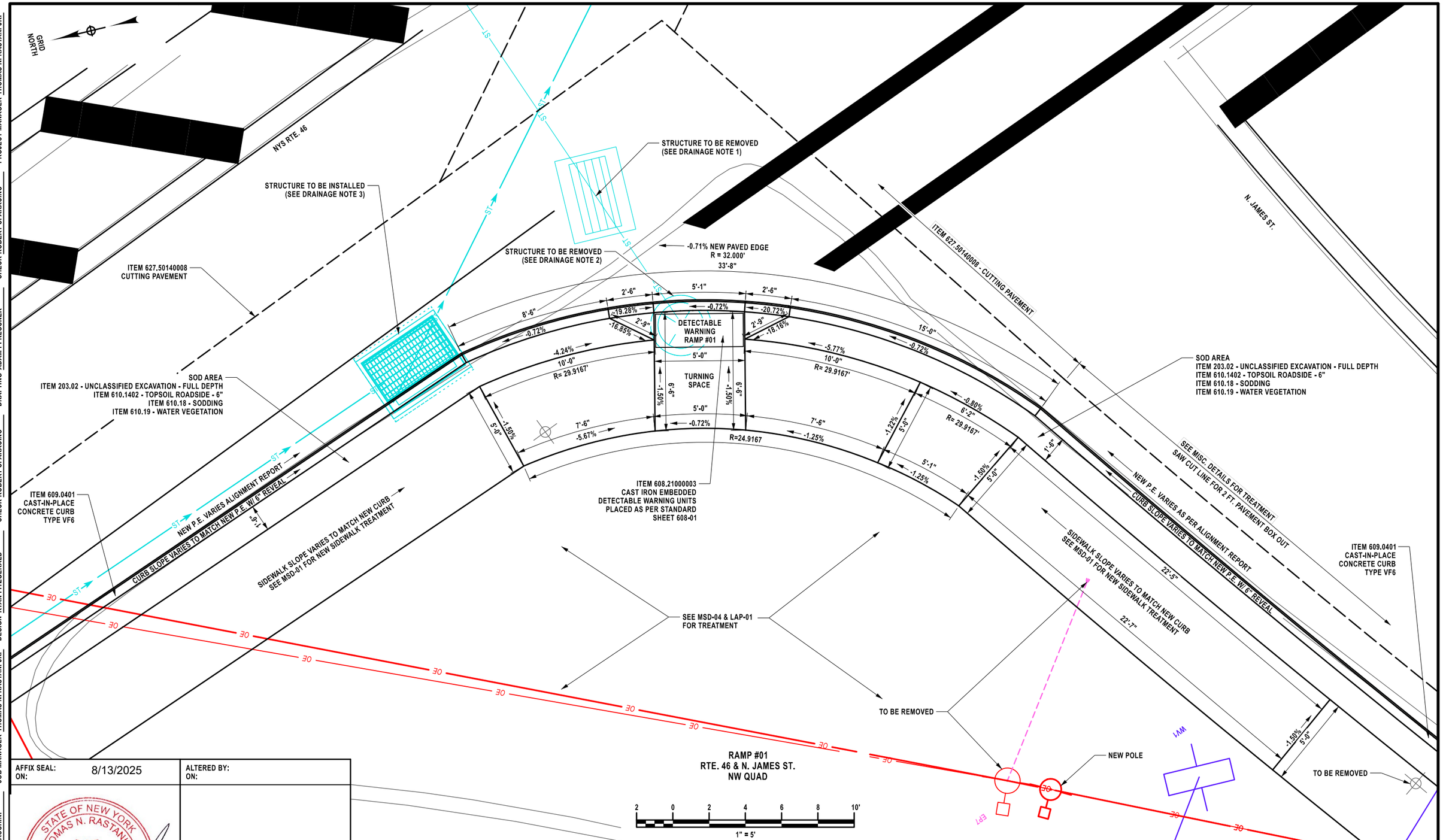

PROJECT MANAGER THOMAS N. RASTANI JR.
CHECK ROBERT SPARACINO
DRAFTING ADAM P. KLOSNER
CHECK ROBERT SPARACINO
DESIGN RYAN FITZGERALD
JOB MANAGER THOMAS N. RASTANI JR.
DESIGN SUPERVISOR DAVID P. FACCHINI

FILE NAME = 2806.52_CPH_MSD_05.dgn
DATE/TIME = 31-JUL-2025 14:35
USER = rsparacino

AFFIX SEAL: ON: 8/13/2025

ALTERED BY: ON:

STATE OF NEW YORK · THOMAS N. RASTANI JR. · 087842 · LICENSED PROFESSIONAL ENGINEER

D265579

AS-BUILT REVISIONS
DESCRIPTION OF ALTERATIONS:

CITY OF ROME: BLACK RIVER BLVD. ART. RTE 46-S.H. 9383

COUNTY: ONEIDA REGION: 02

PIN 2806.52
RTE 46
UTILITY QUALITY LEVEL D

BRIDGES

CULVERTS

ALL DIMENSIONS IN ft UNLESS OTHERWISE NOTED

MISCELLANEOUS DETAILS

CONTRACT NUMBER D265579

DRAWING NO. MSD-05

SHEET NO. 18

IT IS A VIOLATION OF LAW FOR ANY PERSON, UNLESS THEY ARE ACTING UNDER THE DIRECTION OF A LICENSED PROFESSIONAL ENGINEER, ARCHITECT, LANDSCAPE ARCHITECT, OR LAND SURVEYOR, TO ALTER AN ITEM IN ANY WAY. IF AN ITEM BEARING THE STAMP OF A LICENSED PROFESSIONAL IS ALTERED, THE ALTERING ENGINEER, ARCHITECT, LANDSCAPE ARCHITECT, OR LAND SURVEYOR SHALL STAMP THE DOCUMENT AND INCLUDE THE NOTATION "ALTERED BY" FOLLOWED BY THEIR SIGNATURE, THE DATE OF SUCH ALTERATION, AND A SPECIFIC DESCRIPTION OF THE ALTERATION.

NEW YORK STATE Department of Transportation

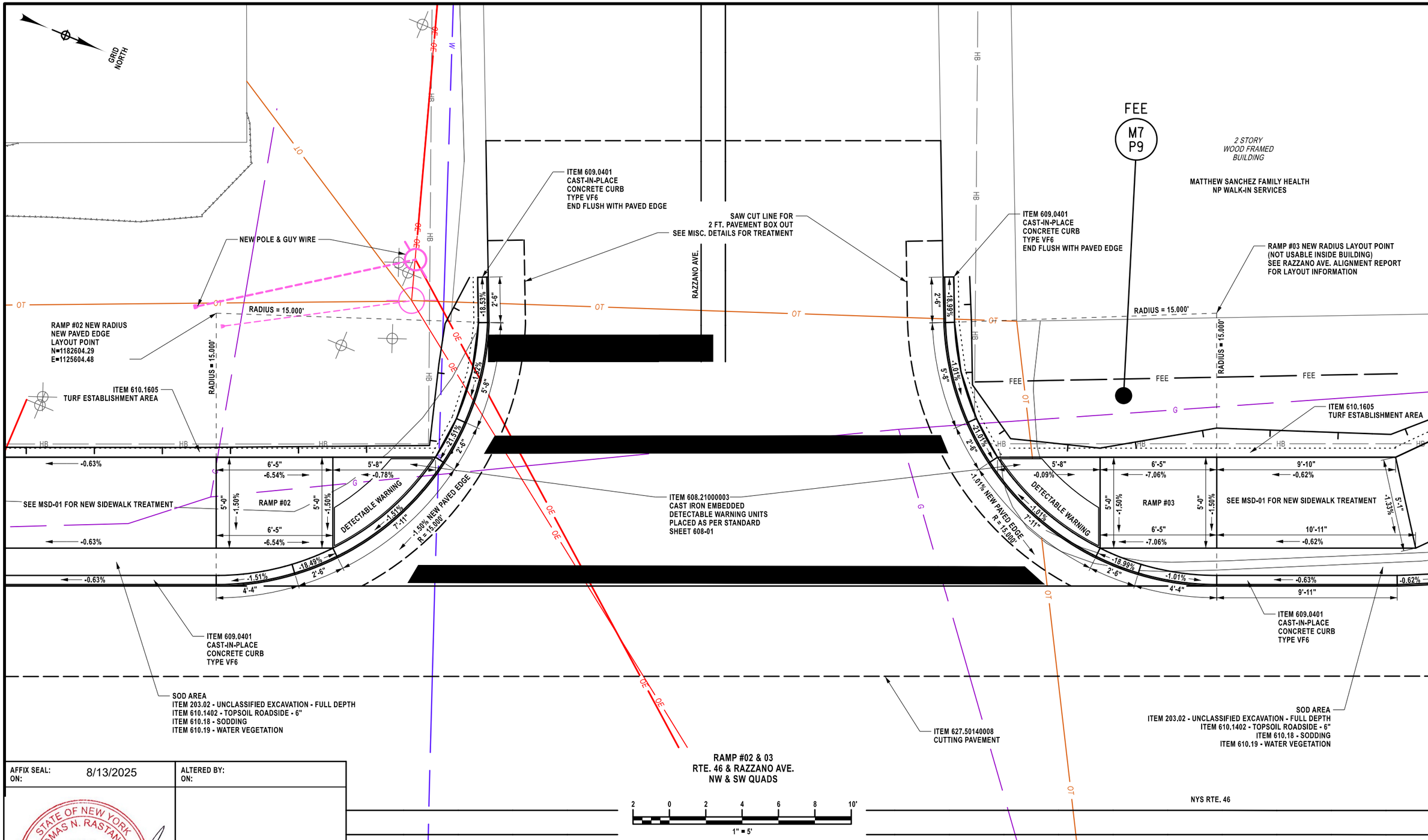

RAMP #02 & 03
RTE. 46 & RAZZANO AVE.
NW & SW QUADS

PROJECT MANAGER THOMAS N. RASTANI JR.
CHECK ROBERT SPARACINO
DRAFTING ADAM P. KLOSNER
CHECK ROBERT SPARACINO
DESIGN RYAN FITZGERALD
JOB MANAGER THOMAS N. RASTANI JR.
DESIGN SUPERVISOR DAVID P. FACCHINI

FILE NAME = 2806.52_CPH_MSD_06.dgn
DATE/TIME = 31-JUL-2025 14:37
USER = rsparacino

AFFIX SEAL: ON: 8/13/2025

STATE OF NEW YORK
THOMAS N. RASTANI JR.
087842
LICENSED PROFESSIONAL ENGINEER

D265579

ALTERED BY:
ON:

AS-BUILT REVISIONS
DESCRIPTION OF ALTERATIONS:

CITY OF ROME: BLACK RIVER BLVD. ART. RTE 46-S.H. 9383

COUNTY: ONEIDA REGION: 02

PIN 2806.52
RTE 46
UTILITY QUALITY LEVEL D

BRIDGES

CULVERTS

ALL DIMENSIONS IN ft UNLESS OTHERWISE NOTED

MISCELLANEOUS DETAILS

CONTRACT NUMBER
D265579

DRAWING NO. MSD-06
SHEET NO. 19

IT IS A VIOLATION OF LAW FOR ANY PERSON, UNLESS THEY ARE ACTING UNDER THE DIRECTION OF A LICENSED PROFESSIONAL ENGINEER, ARCHITECT, LANDSCAPE ARCHITECT, OR LAND SURVEYOR, TO ALTER AN ITEM IN ANY WAY. IF AN ITEM BEARING THE STAMP OF A LICENSED PROFESSIONAL IS ALTERED, THE ALTERING ENGINEER, ARCHITECT, LANDSCAPE ARCHITECT, OR LAND SURVEYOR SHALL STAMP THE DOCUMENT AND INCLUDE THE NOTATION "ALTERED BY" FOLLOWED BY THEIR SIGNATURE, THE DATE OF SUCH ALTERATION, AND A SPECIFIC DESCRIPTION OF THE ALTERATION.

NEW YORK STATE Department of Transportation

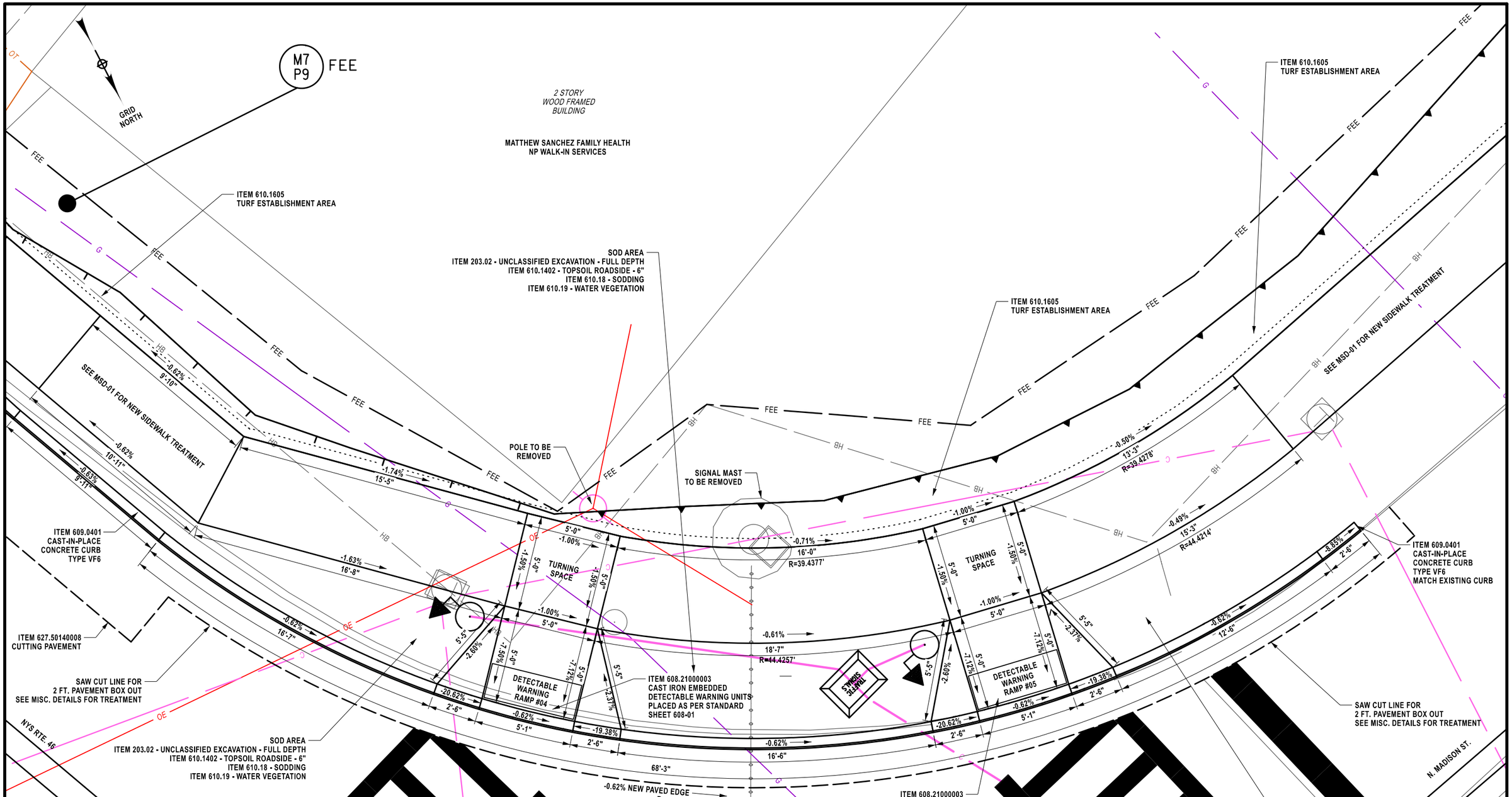

RAMP #04 & 05
RTE. 46 & N. MADISON ST.
SW QUAD

PROJECT MANAGER THOMAS N. RASTANI JR.
CHECK ROBERT SPARACINO
DRAFTING ADAM P. KLOSNER
DESIGN RYAN FITZGERALD
JOB MANAGER THOMAS N. RASTANI JR.
DESIGN SUPERVISOR DAVID P. FACCHINI

FILE NAME = 2806.52_CPH_MSD_07.dgn
DATE/TIME = 31-JUL-2025 14:40
USER = rsparacino

AFFIX SEAL:
ON: 8/13/2025

ALTERED BY:
ON:

STATE OF NEW YORK
THOMAS N. RASTANI JR
087842
LICENSED PROFESSIONAL ENGINEER

D265579

AS-BUILT REVISIONS
DESCRIPTION OF ALTERATIONS:

CITY OF ROME: BLACK RIVER BLVD. ART. RTE 46-S.H. 9383

COUNTY: ONEIDA REGION: 02

PIN 2806.52
RTE 46
UTILITY QUALITY LEVEL D

BRIDGES

CULVERTS

ALL DIMENSIONS IN ft UNLESS OTHERWISE NOTED

MISCELLANEOUS DETAILS

CONTRACT NUMBER
D265579

DRAWING NO. MSD-07
SHEET NO. 20

IT IS A VIOLATION OF LAW FOR ANY PERSON, UNLESS THEY ARE ACTING UNDER THE DIRECTION OF A LICENSED PROFESSIONAL ENGINEER, ARCHITECT, LANDSCAPE ARCHITECT, OR LAND SURVEYOR, TO ALTER AN ITEM IN ANY WAY. IF AN ITEM BEARING THE STAMP OF A LICENSED PROFESSIONAL IS ALTERED, THE ALTERING ENGINEER, ARCHITECT, LANDSCAPE ARCHITECT, OR LAND SURVEYOR SHALL STAMP THE DOCUMENT AND INCLUDE THE NOTATION "ALTERED BY" FOLLOWED BY THEIR SIGNATURE, THE DATE OF SUCH ALTERATION, AND A SPECIFIC DESCRIPTION OF THE ALTERATION.

NEW YORK STATE Department of Transportation

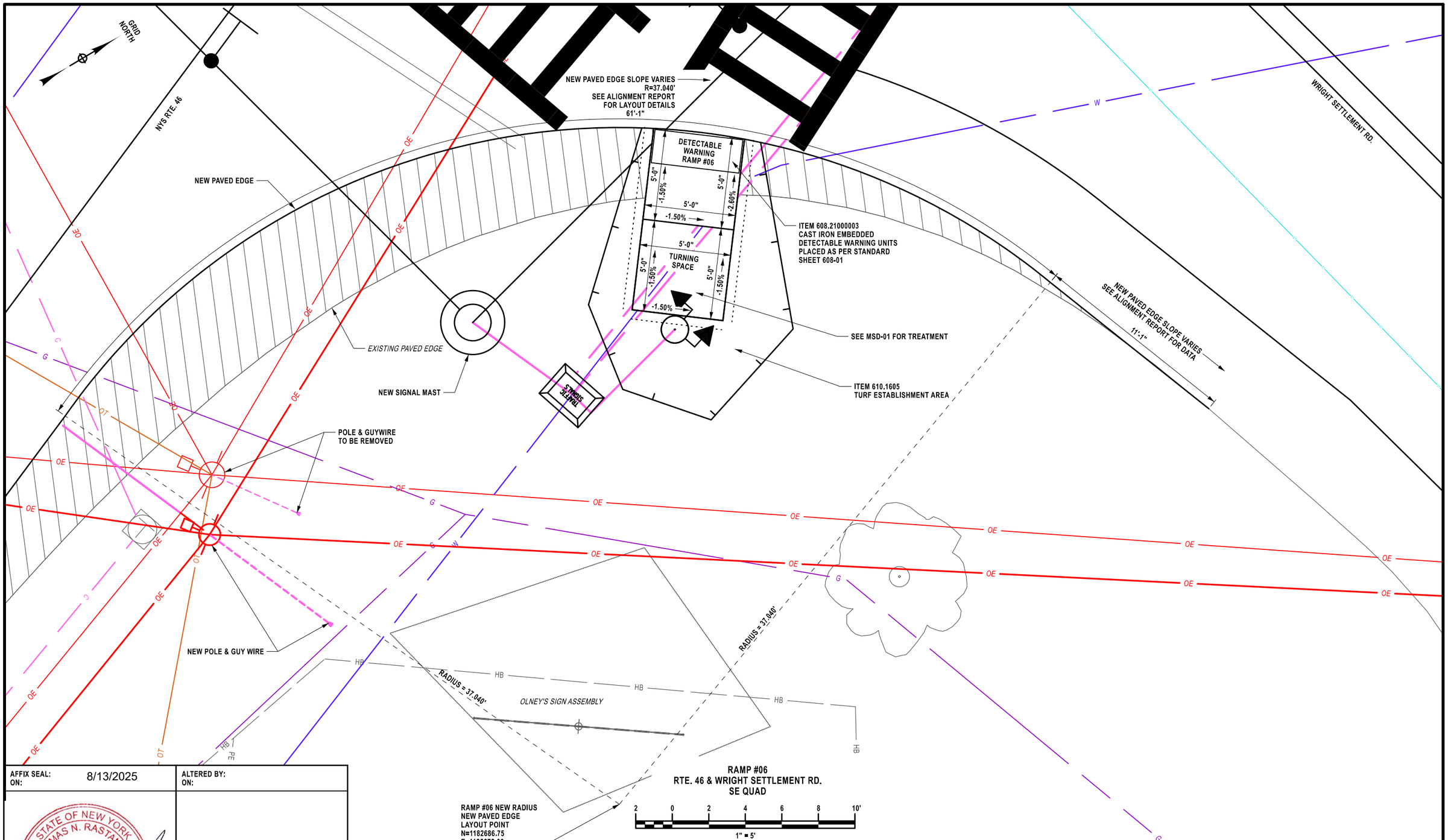

PROJECT MANAGER THOMAS N. RASTANI JR.
CHECK ROBERT SPARACINO
DRAFTING ADAM P. KLOSNER
CHECK ROBERT SPARACINO
DESIGN RYAN FITZGERALD
JOB MANAGER THOMAS N. RASTANI JR.
DESIGN SUPERVISOR DAVID P. FACCHINI

FILE NAME = 2806.52_CPH_MSD_08.dgn
DATE/TIME = 31-JUL-2025 14:49
USER = rsparacino

AFFIX SEAL: ON: 8/13/2025

ALTERED BY: ON:

STATE OF NEW YORK
THOMAS N. RASTANI JR.
087842
LICENSED PROFESSIONAL ENGINEER

D265579

AS-BUILT REVISIONS
DESCRIPTION OF ALTERATIONS:

CITY OF ROME: BLACK RIVER BLVD. ART. RTE 46-S.H. 9383

COUNTY: ONEIDA REGION: 02

PIN 2806.52
RTE 46
UTILITY QUALITY LEVEL D

BRIDGES

CULVERTS

ALL DIMENSIONS IN ft UNLESS OTHERWISE NOTED

MISCELLANEOUS DETAILS

CONTRACT NUMBER
D265579

DRAWING NO. MSD-08
SHEET NO. 21

IT IS A VIOLATION OF LAW FOR ANY PERSON, UNLESS THEY ARE ACTING UNDER THE DIRECTION OF A LICENSED PROFESSIONAL ENGINEER, ARCHITECT, LANDSCAPE ARCHITECT, OR LAND SURVEYOR, TO ALTER AN ITEM IN ANY WAY. IF AN ITEM BEARING THE STAMP OF A LICENSED PROFESSIONAL IS ALTERED, THE ALTERING ENGINEER, ARCHITECT, LANDSCAPE ARCHITECT, OR LAND SURVEYOR SHALL STAMP THE DOCUMENT AND INCLUDE THE NOTATION "ALTERED BY" FOLLOWED BY THEIR SIGNATURE, THE DATE OF SUCH ALTERATION, AND A SPECIFIC DESCRIPTION OF THE ALTERATION.

NEW YORK STATE Department of Transportation

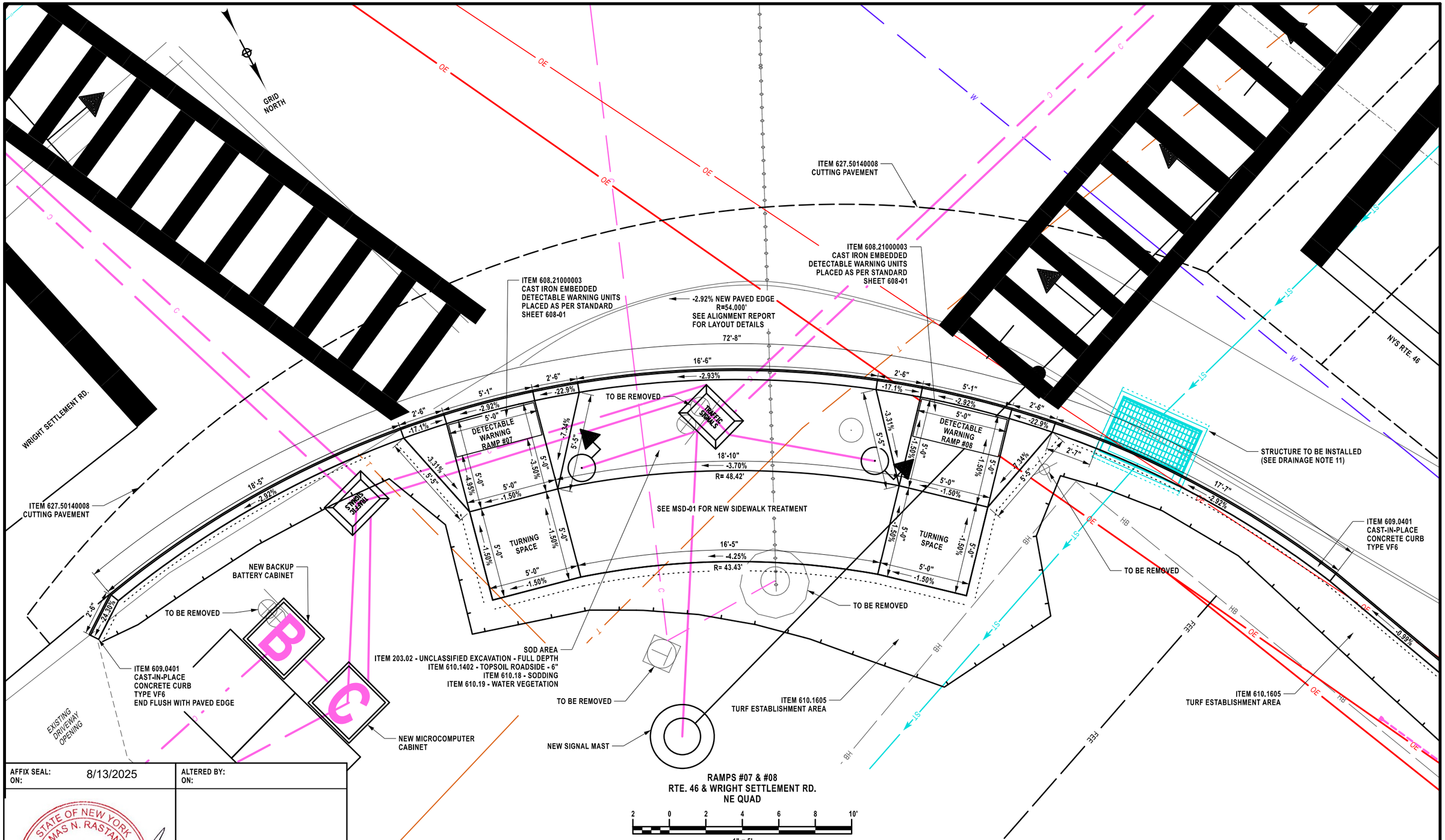

PROJECT MANAGER THOMAS N. RASTANI JR.
CHECK ROBERT SPARACINO
DRAFTING ADAM P. KLOSNER
CHECK ROBERT SPARACINO
DESIGN RYAN FITZGERALD
JOB MANAGER THOMAS N. RASTANI JR.
DESIGN SUPERVISOR DAVID P. FACCHINI

FILE NAME = 2806.52_CPH_MSD_09.dgn
DATE/TIME = 31-JUL-2025 14:52
USER = rsparacino

AFFIX SEAL: ON: 8/13/2025

ALTERED BY: ON:

STATE OF NEW YORK
THOMAS N. RASTANI JR.
087842
LICENSED PROFESSIONAL ENGINEER

D265579

AS-BUILT REVISIONS
DESCRIPTION OF ALTERATIONS:

CITY OF ROME: BLACK RIVER BLVD. ART. RTE 46-S.H. 9383

COUNTY: ONEIDA REGION: 02

PIN 2806.52
RTE 46
UTILITY QUALITY LEVEL D

BRIDGES

CULVERTS

ALL DIMENSIONS IN ft UNLESS OTHERWISE NOTED

MISCELLANEOUS DETAILS

CONTRACT NUMBER
D265579

DRAWING NO. MSD-09
SHEET NO. 22

IT IS A VIOLATION OF LAW FOR ANY PERSON, UNLESS THEY ARE ACTING UNDER THE DIRECTION OF A LICENSED PROFESSIONAL ENGINEER, ARCHITECT, LANDSCAPE ARCHITECT, OR LAND SURVEYOR, TO ALTER AN ITEM IN ANY WAY. IF AN ITEM BEARING THE STAMP OF A LICENSED PROFESSIONAL IS ALTERED, THE ALTERING ENGINEER, ARCHITECT, LANDSCAPE ARCHITECT, OR LAND SURVEYOR SHALL STAMP THE DOCUMENT AND INCLUDE THE NOTATION "ALTERED BY" FOLLOWED BY THEIR SIGNATURE, THE DATE OF SUCH ALTERATION, AND A SPECIFIC DESCRIPTION OF THE ALTERATION.

NEW YORK STATE Department of Transportation

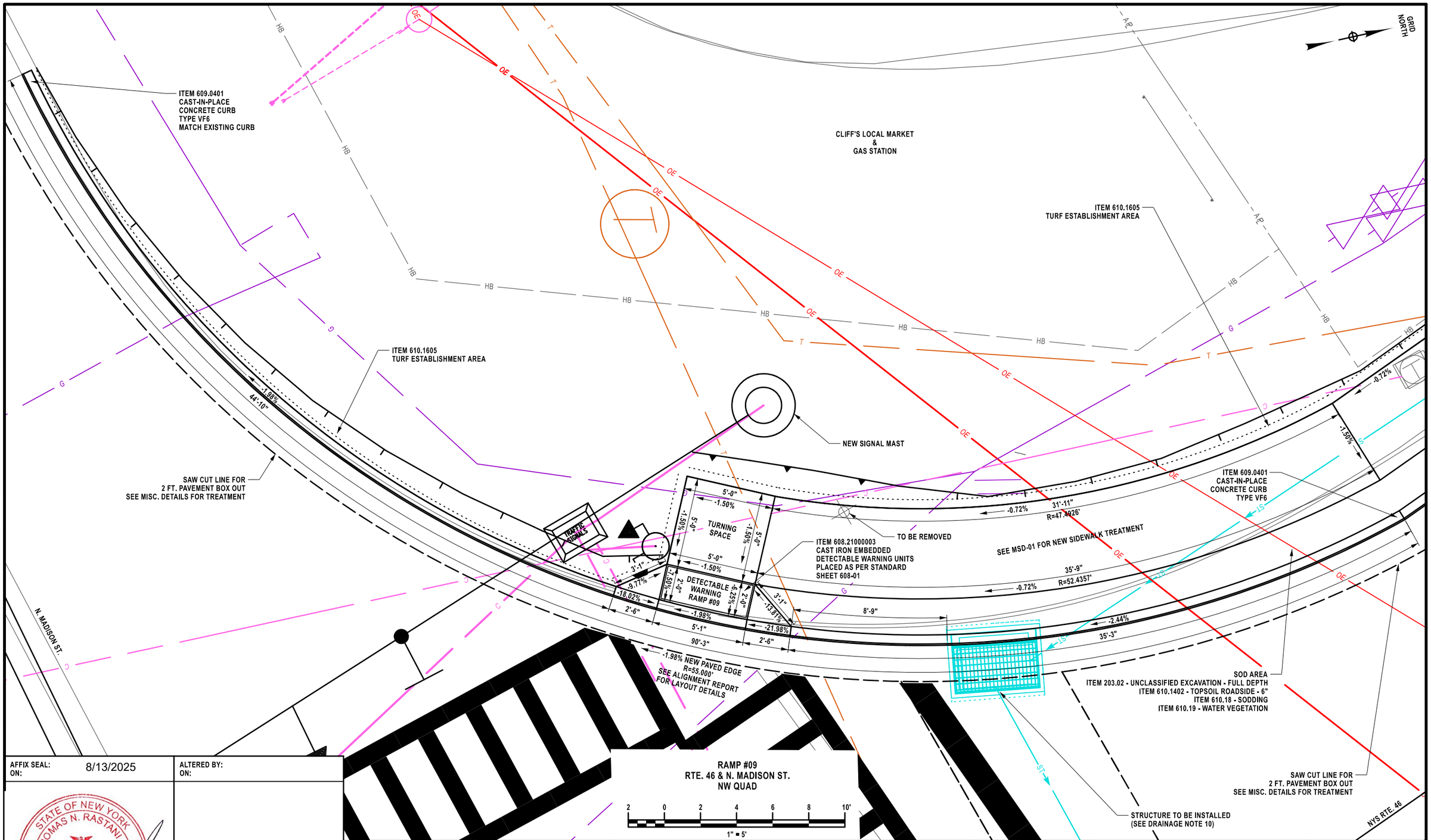

PROJECT MANAGER THOMAS N. RASTANI JR.
CHECK ROBERT SPARACINO
DRAFTING ADAM P. KLOSNER
CHECK ROBERT SPARACINO
DESIGN RYAN FITZGERALD
JOB MANAGER THOMAS N. RASTANI JR.
DESIGN SUPERVISOR DAVID P. FACCHINI

FILE NAME = 2806.52_CPH_MSD_10.dgn
DATE/TIME = 31-JUL-2025 14:54
USER = rsparacino

AFFIX SEAL: ON: 8/13/2025

ALTERED BY: ON:

STATE OF NEW YORK
THOMAS N. RASTANI JR.
087842
LICENSED PROFESSIONAL ENGINEER

D265579

AS-BUILT REVISIONS
DESCRIPTION OF ALTERATIONS:

CITY OF ROME: BLACK RIVER BLVD. ART. RTE 46-S.H. 9383

COUNTY: ONEIDA REGION: 02

PIN 2806.52
RTE 46
UTILITY QUALITY LEVEL D

BRIDGES

CULVERTS

ALL DIMENSIONS IN ft UNLESS OTHERWISE NOTED

MISCELLANEOUS DETAILS

CONTRACT NUMBER
D265579

DRAWING NO. MSD-10
SHEET NO. 23

IT IS A VIOLATION OF LAW FOR ANY PERSON, UNLESS THEY ARE ACTING UNDER THE DIRECTION OF A LICENSED PROFESSIONAL ENGINEER, ARCHITECT, LANDSCAPE ARCHITECT, OR LAND SURVEYOR, TO ALTER AN ITEM IN ANY WAY. IF AN ITEM BEARING THE STAMP OF A LICENSED PROFESSIONAL IS ALTERED, THE ALTERING ENGINEER, ARCHITECT, LANDSCAPE ARCHITECT, OR LAND SURVEYOR SHALL STAMP THE DOCUMENT AND INCLUDE THE NOTATION "ALTERED BY" FOLLOWED BY THEIR SIGNATURE, THE DATE OF SUCH ALTERATION, AND A SPECIFIC DESCRIPTION OF THE ALTERATION.

NEW YORK STATE Department of Transportation

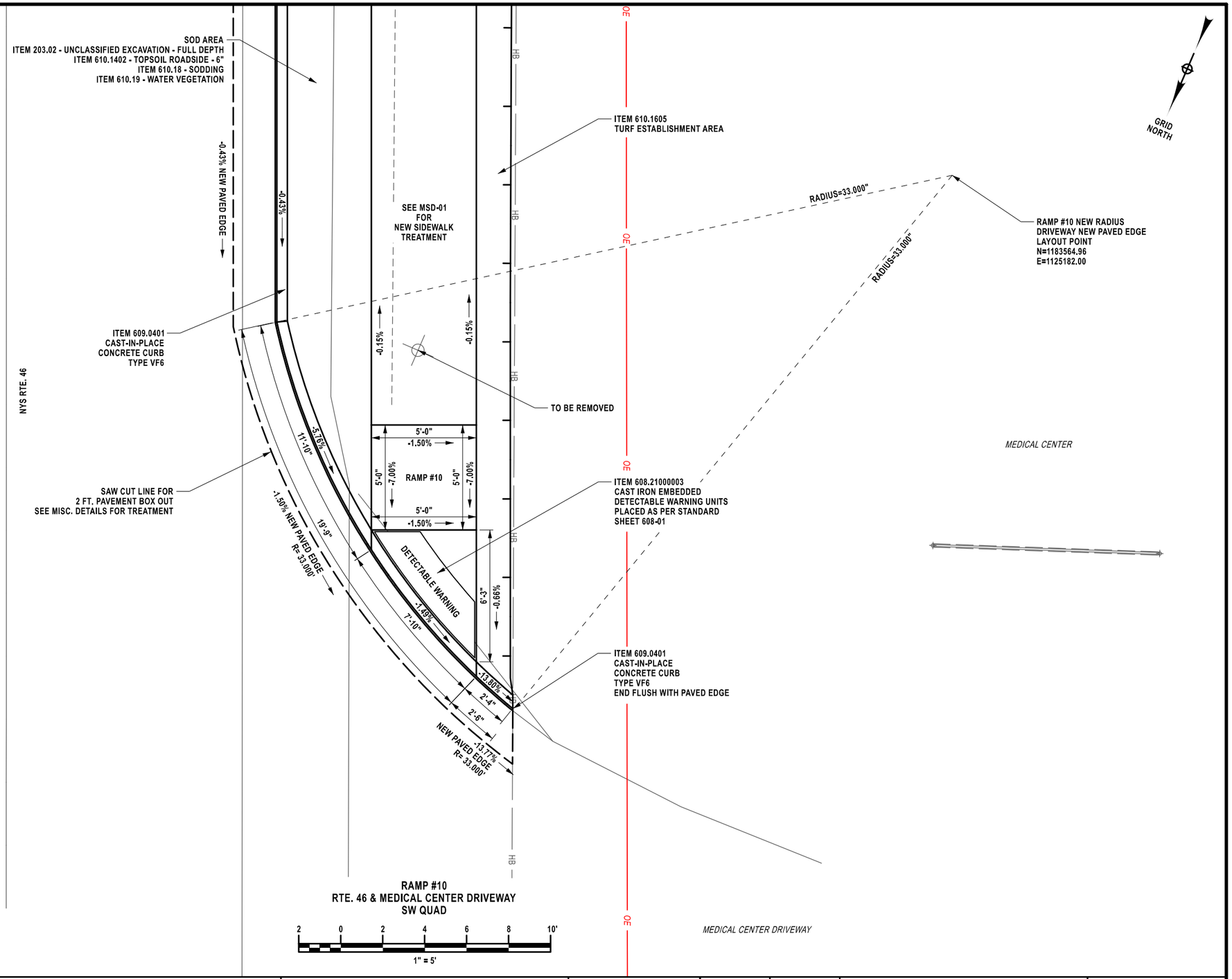

RAMP #10
RTE. 46 & MEDICAL CENTER DRIVEWAY
SW QUAD

PROJECT MANAGER THOMAS N. RASTANI JR.
CHECK ROBERT SPARACINO
DRAFTING ADAM P. KLOSNER
CHECK ROBERT SPARACINO
DESIGN RYAN FITZGERALD
JOB MANAGER THOMAS N. RASTANI JR.
DESIGN SUPERVISOR DAVID P. FACCHINI

FILE NAME = 2806.52_CPH_MSD_11.dgn
DATE/TIME = 31-JUL-2025 14:57
USER = rsparacino

AFFIX SEAL: ON: 8/13/2025

ALTERED BY: ON:

STATE OF NEW YORK
THOMAS N. RASTANI JR.
087842
LICENSED PROFESSIONAL ENGINEER

D265579

AS-BUILT REVISIONS
DESCRIPTION OF ALTERATIONS:

CITY OF ROME: BLACK RIVER BLVD. ART. RTE 46-S.H. 9383

COUNTY: ONEIDA REGION: 02

PIN 2806.52
RTE 46
UTILITY QUALITY LEVEL D

BRIDGES

CULVERTS

ALL DIMENSIONS IN ft UNLESS OTHERWISE NOTED

MISCELLANEOUS DETAILS

CONTRACT NUMBER
D265579

DRAWING NO. MSD-11
SHEET NO. 24

IT IS A VIOLATION OF LAW FOR ANY PERSON, UNLESS THEY ARE ACTING UNDER THE DIRECTION OF A LICENSED PROFESSIONAL ENGINEER, ARCHITECT, LANDSCAPE ARCHITECT, OR LAND SURVEYOR, TO ALTER AN ITEM IN ANY WAY. IF AN ITEM BEARING THE STAMP OF A LICENSED PROFESSIONAL IS ALTERED, THE ALTERING ENGINEER, ARCHITECT, LANDSCAPE ARCHITECT, OR LAND SURVEYOR SHALL STAMP THE DOCUMENT AND INCLUDE THE NOTATION "ALTERED BY" FOLLOWED BY THEIR SIGNATURE, THE DATE OF SUCH ALTERATION, AND A SPECIFIC DESCRIPTION OF THE ALTERATION.

NEW YORK STATE Department of Transportation

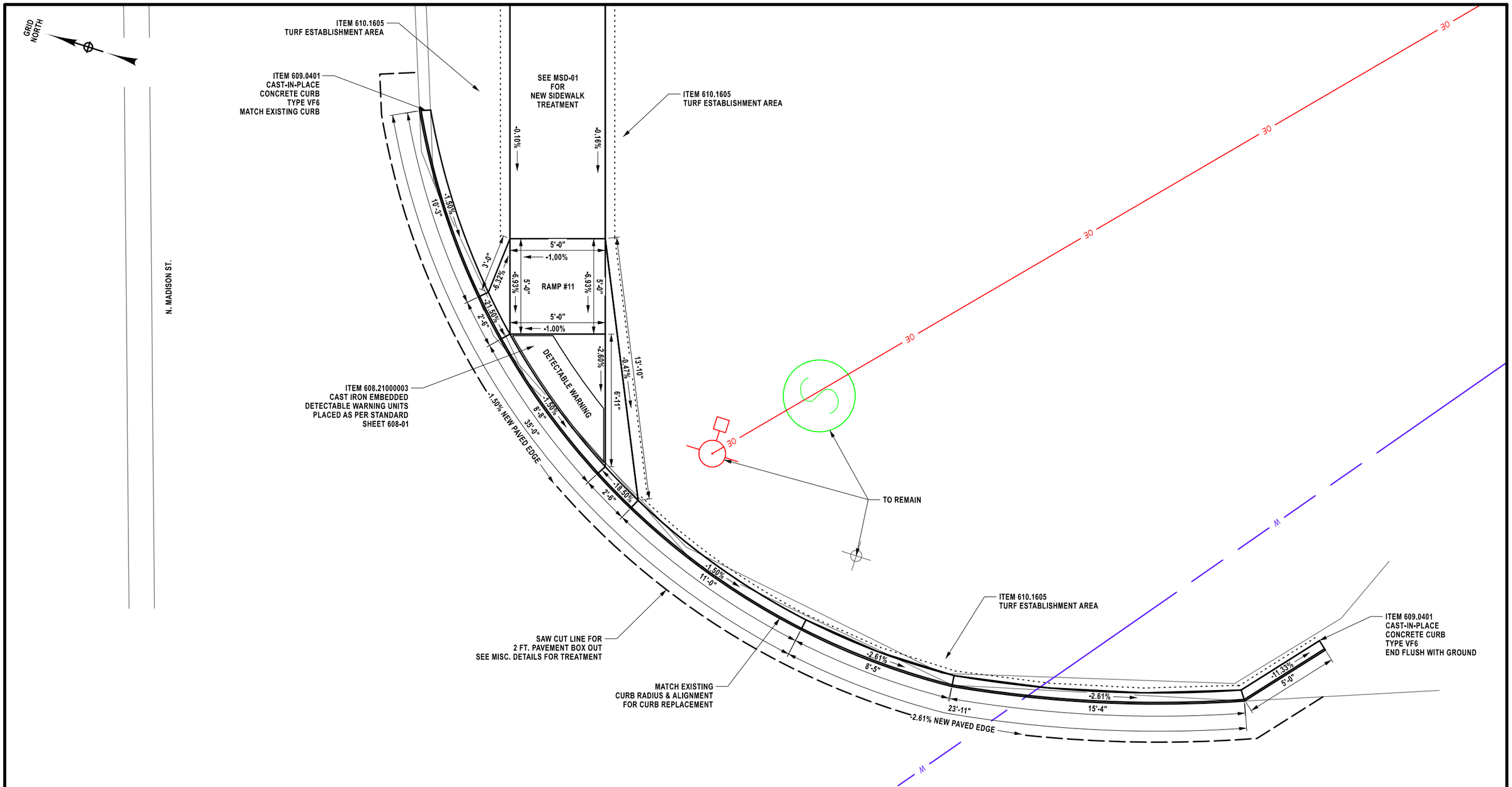

RAMP #11
N. MADISON ST. & ROSENBURG RD.
SE QUAD

2 0 2 4 6 8 10'
1" = 5'

PROJECT MANAGER THOMAS N. RASTANI JR.
CHECK ROBERT SPARACINO
DRAFTING ADAM P. KLOSNER
CHECK ROBERT SPARACINO
DESIGN RYAN FITZGERALD
JOB MANAGER THOMAS N. RASTANI JR.
DESIGN SUPERVISOR DAVID P. FACCHINI

FILE NAME = 2806.52_CPH_MSD_12.dgn
DATE/TIME = 31-JUL-2025 14:58
USER = rsparacino

AFFIX SEAL: ON: 8/13/2025

ALTERED BY: ON:

STATE OF NEW YORK
THOMAS N. RASTANI JR.
087842
LICENSED PROFESSIONAL ENGINEER

D265579

AS-BUILT REVISIONS
DESCRIPTION OF ALTERATIONS:

CITY OF ROME: BLACK RIVER BLVD. ART. RTE 46-S.H. 9383

COUNTY: ONEIDA REGION: 02

PIN 2806.52
RTE 46
UTILITY QUALITY LEVEL D

BRIDGES

CULVERTS

ALL DIMENSIONS IN ft UNLESS OTHERWISE NOTED

MISCELLANEOUS DETAILS

CONTRACT NUMBER
D265579

DRAWING NO. MSD-12
SHEET NO. 25

IT IS A VIOLATION OF LAW FOR ANY PERSON, UNLESS THEY ARE ACTING UNDER THE DIRECTION OF A LICENSED PROFESSIONAL ENGINEER, ARCHITECT, LANDSCAPE ARCHITECT, OR LAND SURVEYOR, TO ALTER AN ITEM IN ANY WAY. IF AN ITEM BEARING THE STAMP OF A LICENSED PROFESSIONAL IS ALTERED, THE ALTERING ENGINEER, ARCHITECT, LANDSCAPE ARCHITECT, OR LAND SURVEYOR SHALL STAMP THE DOCUMENT AND INCLUDE THE NOTATION "ALTERED BY" FOLLOWED BY THEIR SIGNATURE, THE DATE OF SUCH ALTERATION, AND A SPECIFIC DESCRIPTION OF THE ALTERATION.

NEW YORK STATE Department of Transportation

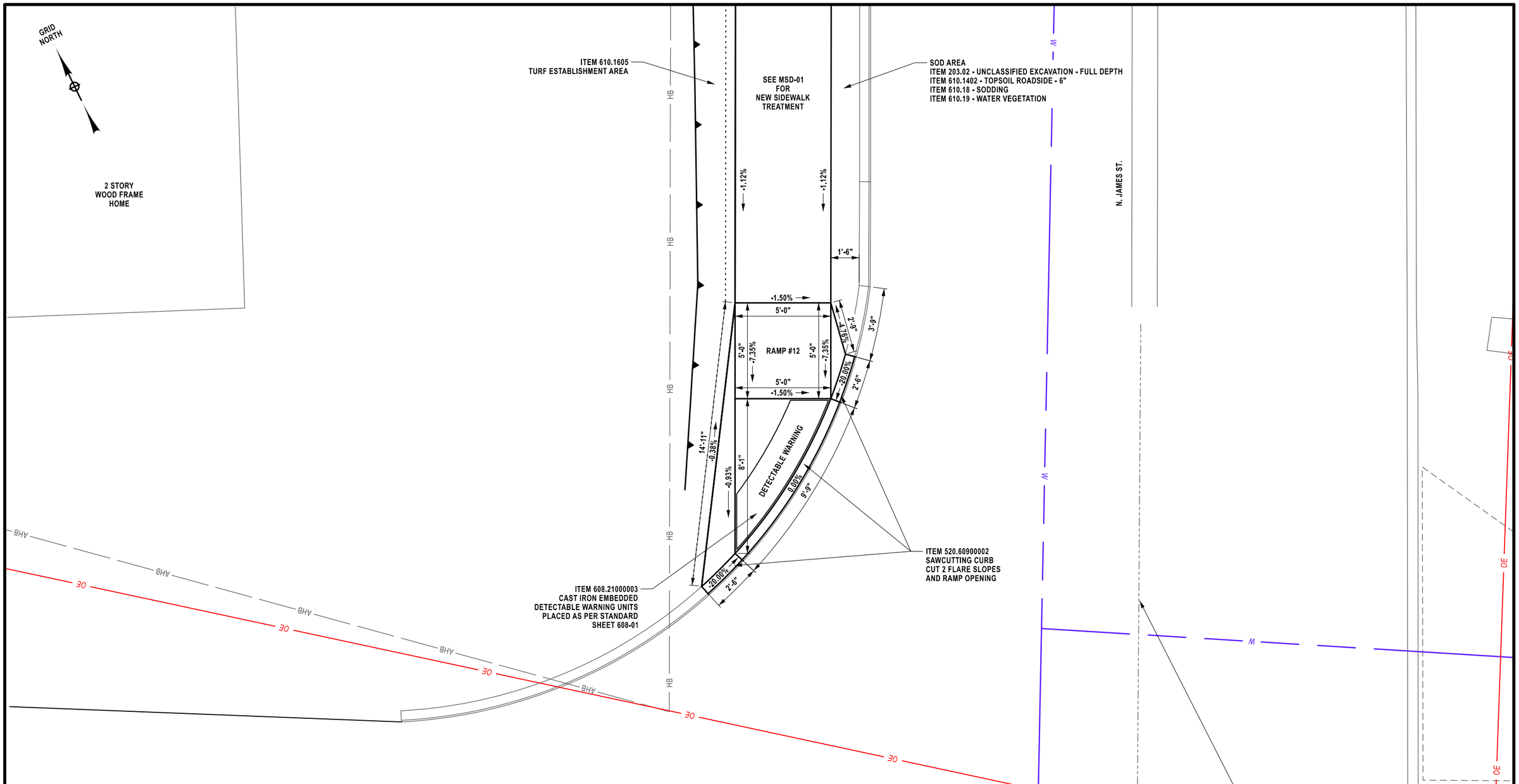

RAMP #12
N. JAMES ST. & ROSENBURG RD.
NE QUAD

2 0 2 4 6 8 10'
1" = 5'

PROJECT MANAGER THOMAS N. RASTANI JR.
CHECK ROBERT SPARACINO
DRAFTING ADAM P. KLOSNER
CHECK ROBERT SPARACINO
DESIGN RYAN FITZGERALD
JOB MANAGER THOMAS N. RASTANI JR.
DESIGN SUPERVISOR DAVID P. FACCHINI

FILE NAME = 2806.52_CPH_MSD_13.dgn
DATE/TIME = 31-JUL-2025 15:00
USER = rsparacino

AFFIX SEAL: ON: 8/13/2025

ALTERED BY: ON:

STATE OF NEW YORK
THOMAS N. RASTANI JR.
087842
LICENSED PROFESSIONAL ENGINEER

D265579

AS-BUILT REVISIONS
DESCRIPTION OF ALTERATIONS:

CITY OF ROME: BLACK RIVER BLVD. ART. RTE 46-S.H. 9383

COUNTY: ONEIDA REGION: 02

PIN 2806.52
RTE 46
UTILITY QUALITY LEVEL D

BRIDGES

CULVERTS

ALL DIMENSIONS IN ft UNLESS OTHERWISE NOTED

MISCELLANEOUS DETAILS

CONTRACT NUMBER D265579

DRAWING NO. MSD-13

SHEET NO. 26

IT IS A VIOLATION OF LAW FOR ANY PERSON, UNLESS THEY ARE ACTING UNDER THE DIRECTION OF A LICENSED PROFESSIONAL ENGINEER, ARCHITECT, LANDSCAPE ARCHITECT, OR LAND SURVEYOR, TO ALTER AN ITEM IN ANY WAY. IF AN ITEM BEARING THE STAMP OF A LICENSED PROFESSIONAL IS ALTERED, THE ALTERING ENGINEER, ARCHITECT, LANDSCAPE ARCHITECT, OR LAND SURVEYOR SHALL STAMP THE DOCUMENT AND INCLUDE THE NOTATION "ALTERED BY" FOLLOWED BY THEIR SIGNATURE, THE DATE OF SUCH ALTERATION, AND A SPECIFIC DESCRIPTION OF THE ALTERATION.

NEW YORK STATE Department of Transportation

BASELINE EQUALITY
℄ STA. 116+50.00 BK=
℄ STA. 67+67.00 AH

℄ PT. STA. 108+78.96	STA. NAME CB 233

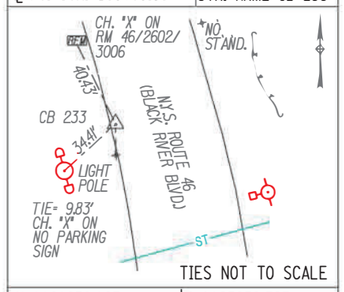

N 1181956.187	E 1125859.727

DESCRIPTION: P.K. NAIL SET IN PAVEMENT ON THE WESTERLY SIDE OF N.Y.S. ROUTE 46, 3±' EASTERLY OF PAVEMENT EDGE, 40±' SOUTHERLY OF RM 46/2602/3006.

℄ PT. STA. 116+47.53	STA. NAME CB 100

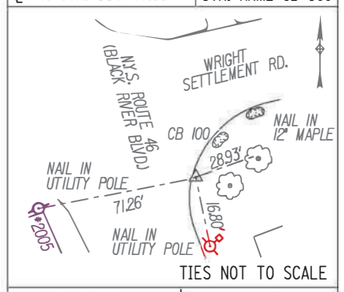

N 1182693.575	E 1125643.030

DESCRIPTION: 60D NAIL SET AT THE SOUTHEASTERLY QUADRANT OF THE N.Y.S. ROUTE 46 AND WRIGHT SETTLEMENT ROAD INTERSECTION, 2±' EASTERLY OF PAVEMENT EDGE.

℄ PT. STA. 72+17.44	STA. NAME CB 120

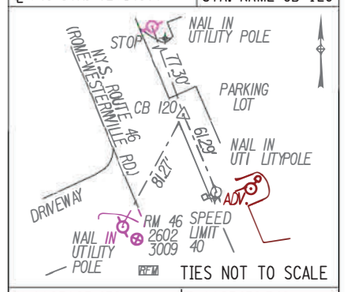

N 1183103.450	E 1125450.349

DESCRIPTION: 60D NAIL SET ALONG THE EASTERLY SIDE OF N.Y.S. ROUTE 46, 5±' EASTERLY OF PAVEMENT EDGE, 102±' NORTHWESTERLY OF RM 46/2602/3009.

TABLE OF RIGHT OF WAY ACQUISITIONS

MAP NO(S).	PARCEL NO.(S)	TRN. NO.	REPUTED OWNER(S)	TYPE OF ACQUISITION	DWG. NO.(S)	AREA SQ. FT.	REMARKS
7	9 10	100	MATTHEW SANCHEZ FAMILY HEALTH NP WALK-IN SERVICES, PLLC	FEE FEE	GNP-01	193± 702±	
8	11	101	OLNEY'S REAL ESTATE OF ROME, LLC	FEE	GNP-01	685±	

R.O.W. MARKERS

NOTES:
1. DISCLAIMER THAT THE TABLE OF MONUMENTS IS FOR ESTIMATION PURPOSES ONLY. ALL MONUMENTS SHALL BE PLACED IN ACCORDANCE WITH RIGHT-OF-WAY APPROPRIATION MAPS.
2. WHEN WORK IS COMPLETED UNDER THIS SECTION, THE CONTRACTOR SHALL PROVIDE A SIGNED COPY OF THIS SHEET TO THE EIC AT THE COMPLETION OF THE PROJECT.

℄ STATION	OFFSET	ITEM 625.03	ITEM 625.04	ITEM 625.05
℄ 116+15±	LEFT			1
℄ 116+37.63	LEFT			1
℄ 67+79.95	LEFT			1
℄ 67+83±	LEFT			1
℄ 67+94.39	LEFT			1
℄ 67+98.92	LEFT			1
℄ 68+21±	LEFT			1
℄ 68+71±	LEFT			1
℄ 68+65±	RIGHT			1

TABLE OF BENCHMARKS

NAME	DESCRIPTION	STATION (APPROX.)	OFFSET (FT)	ELEVATION (FT)
BM-1	RAILROAD SPIKE IN A UTILITY POLE AT THE SOUTHEAST CORNER OF THE N.Y.S. ROUTE 46 AND WRIGHT SETTLEMENT ROAD INTERSECTION.	℄ 116+31	3 LEFT	507.11
BM-2	CHISELED X ON A HYDRANT CAP BOLT AT THE SOUTHWEST CORNER OF THE N.Y.S. ROUTE 46 AND N. JAMES ST. INTERSECTION.	℄ 112+55	62 LEFT	507.85

EXISTING HIGHWAY & PROPERTY MONUMENTATION
MONUMENTATION FOUND PRIOR TO AND/OR DURING CONSTRUCTION

℄ STATION	OFFSET	FOUND SIZE/TYPE	REESTABLISHMENT RECORD
℄ 68+06.40	86.83' LEFT	IRON PIPE	
℄ 68+31.02	323.70' LEFT	1/2" IRON PIPE	
℄ 68+96.56	334.47' LEFT	1/2" IRON ROD	
℄ 69+14.30	337.21' LEFT	BROKEN CONCRETE MONUMENT	
℄ 115+61.01	0.94' RIGHT	CONCRETE MONUMENT	
℄ 116+16.22	159.19' RIGHT	SOUND	
℄ 116+45.32	31.97' RIGHT	CONCRETE MONUMENT	
℄ 116+48.70 B.T.P.A.	199.56' RIGHT	CONCRETE MONUMENT LAYING DOWN	
℄ 116+53.78 B.T.P.A.	255.64' RIGHT	SQUARE MONUMENT	
℄ 115+77.45	1,096.99' RIGHT	MONUMENT	
℄ 115+89.27	1,174.48' RIGHT	2" PINCH PIPE	
℄ 116+48.64 B.T.P.A.	1,141.82' RIGHT	MONUMENT	
℄ 116+71.90 B.T.P.A.	1,105.26' RIGHT	MONUMENT	
℄ 117+10.29 B.T.P.A.	752.94' RIGHT	MONUMENT	

SURVEY DATUM		
HORIZONTAL	VERTICAL	
DATUM: NAD 83 (2011)	DATUM: NAVD 88	THE COMBINED SCALE FACTOR IS A FUNCTION OF CONVERTING GEODETIC CONTROL DATA TO PLANIMETRIC DISTANCES AT SEA LEVEL.
NYSPCS ZONE: 3102 CENTRAL	UNITS: FT	THE COMBINED SCALE FACTOR FOR THIS SITE IS: 1.00000000
UNITS: FT		A SURVEY CONTROL REPORT IS AVAILABLE FOR THE CONTRACTOR'S USE AT THE REGIONAL D.O.T. OFFICE, UNDER FILE NUMBER - G 10095.06 OR FROM PROJECTWISE, REGION 2, P.I.N. 2806.52, SURVEY FOLDER

AFFIX SEAL: S. ARTHUR
ON: 8/14/2025

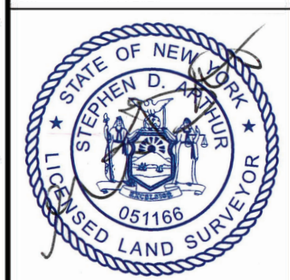

ALTERED BY:
ON:

AS-BUILT REVISIONS
DESCRIPTION OF ALTERATIONS:

CITY OF ROME: BLACK RIVER BLVD. ART. RTE 46-S.H. 9383

COUNTY: ONEIDA REGION: 02

PIN 2806.52
RTE 46
UTILITY QUALITY LEVEL D

BRIDGES

CULVERTS

ALL DIMENSIONS IN ft UNLESS OTHERWISE NOTED

BASELINE TIES AND BENCHMARKS

CONTRACT NUMBER D265579

DRAWING NO. RWT-01
SHEET NO. 27

IT IS A VIOLATION OF LAW FOR ANY PERSON, UNLESS THEY ARE ACTING UNDER THE DIRECTION OF A LICENSED PROFESSIONAL ENGINEER, ARCHITECT, LANDSCAPE ARCHITECT, OR LAND SURVEYOR, TO ALTER AN ITEM IN ANY WAY. IF AN ITEM BEARING THE STAMP OF A LICENSED PROFESSIONAL IS ALTERED, THE ALTERING ENGINEER, ARCHITECT, LANDSCAPE ARCHITECT, OR LAND SURVEYOR SHALL STAMP THE DOCUMENT AND INCLUDE THE NOTATION "ALTERED BY" FOLLOWED BY THEIR SIGNATURE, THE DATE OF SUCH ALTERATION, AND A SPECIFIC DESCRIPTION OF THE ALTERATION.

NEW YORK STATE Department of Transportation

PROJECT MANAGER T. RASTANI
CHECK S. ARTHUR
DRAFTING M. KUZMICH
CHECK S. ARTHUR
DESIGN M. KUZMICH
JOB MANAGER T. RASTANI
DESIGN SUPERVISOR D. FACCHINI

FILE NAME = 2806.52_CPH_RWT_01.dgn
DATE/TIME = 14-AUG-2025 09:26
USER = rsparacino

SIGNING NOTES:

1. SIGN LOCATIONS AS SHOWN ON PLANS ARE APPROXIMATE. THE CONTRACTOR SHALL INSTALL NEW SIGNS AND RELOCATE EXISTING SIGNS IN ACCORDANCE WITH THE MUTCD AND NYS SUPPLEMENT.
2. THE COLOR IS ONLY SHOWN WHEN THERE IS AN OPTION THAT MUST BE SPECIFIED. ORDER: (BACKGROUND/LEGEND)
3. THE AREA AND PAYMENT AREA FOR SIGNS ARE FROM THE APPLICABLE STANDARD SHEETS OR SIGN FACE LAYOUTS.

DESIGNATION & COLOR (SEE NOTE 2)	LOCATION	TEXT	ITEM	SIZE AREA (SEE NOTE 3)	PAYMENT AREA (SEE NOTE 3) TOTAL PAYMENT AREA
D10-05NY GREEN/WHITE	2, 2B, 18, 34, 39, 50 [6]	46 2602 30XX	646.21	NA NA	NA 6 EA.
D3-1 GREEN/WHITE	18 [2]	BACK TO BACK N James St	645.5102	54 X 12 4.5 SF	4.5 SF 9.0 SF
D3-1 GREEN/WHITE	18, 29 [4]	BACK TO BACK Black River Blvd	645.5102	60 X 12 5.0 SF	5.0 SF 20.0 SF
D3-1 GREEN/WHITE	29 [2]	BACK TO BACK Razzano Ave	645.5102	48 X 12 4.0 SF	4.0 SF 8.0 SF
D9-2 BLUE/WHITE	21 [1]	H	645.5102	24 X 24 4.0 SF	4.0 SF 4.0 SF
NYM14-27 BROWN/WHITE	55, 56, 57 [3]	SCENIC BYWAY	645.5102	24 X 15 2.5 SF	2.5 SF 7.5 SF
NYM18-3 BLACK RIVER TRAIL.EPS DESIGN LAYOUT	55, 56, 57 [3]	BLACK RIVER TRAIL	645.5102	24 X 24 4.0 SF	4.0 SF 12.0 SF
M3-1P WHITE/BLACK	30A, 30B, 32 [3]	NORTH	645.5102	24 X 12 2.0 SF	2.0 SF 6.0 SF
M3-3P WHITE/BLACK	21, 30A, 30B [3]	SOUTH	645.5102	24 X 12 2.0 SF	2.0 SF 6.0 SF
M6-1P L WHITE/BLACK	4, 30A, 30B [3]	←	645.5102	21 X 15 2.2 SF	2.2 SF 6.6 SF

DESIGNATION & COLOR (SEE NOTE 2)	LOCATION	TEXT	ITEM	SIZE AREA (SEE NOTE 3)	PAYMENT AREA (SEE NOTE 3) TOTAL PAYMENT AREA
M6-1P R WHITE/BLACK	25, 30A, 30B [3]	→	645.5102	21 X 15 2.2 SF	2.2 SF 6.6 SF
M6-3P WHITE/BLACK	13, 36 [2]	↑	645.5102	21 X 15 2.2 SF	2.2 SF 4.4 SF
M6-3P C BLUE/WHITE	21 [1]	↑	645.5102	21 X 15 2.2 SF	2.2 SF 2.2 SF
M6-4P WHITE/BLACK	22A, 38A [2]	↔	645.5102	21 X 15 2.2 SF	2.2 SF 4.4 SF
M6-4P C BROWN/WHITE	55, 56, 57 [3]	↔	645.5102	21 X 15 2.2 SF	2.2 SF 6.6 SF
NYM3-1 WHITE/BLACK	21, 30A, 30B, 32 [6]	46	645.5102	24 X 24 4.0 SF	4.0 SF 24.0 SF
NYP1-5 D WHITE/RED	2, 5, 9 [3]	NO STANDING ANY TIME ↔	645.5102	12 X 18 1.5 SF	1.5 SF 4.5 SF
R1-1 RED/WHITE	15 [1]	STOP	645.5102	30 X 30 5.0 SF	6.3 SF 6.3 SF
R2-1 WHITE/BLACK	15B [1]	SPEED LIMIT 30	645.5102	24 X 30 5.0 SF	5.0 SF 5.0 SF
R2-1 WHITE/BLACK	42 [1]	SPEED LIMIT 40	645.5102	24 X 30 5.0 SF	5.0 SF 5.0 SF

OVERHEAD SIGN NUMBER (SIN)
NONE

AFFIX SEAL: ON: 8/13/2025

ALTERED BY: ON:

STATE OF NEW YORK · THOMAS N. RASTANI JR. · 087842 · LICENSED PROFESSIONAL ENGINEER

D265579

AS-BUILT REVISIONS
DESCRIPTION OF ALTERATIONS:

CITY OF ROME: BLACK RIVER BLVD. ART. RTE 46-S.H. 9383

COUNTY: ONEIDA REGION: 02

PIN 2806.52
RTE 46
UTILITY QUALITY LEVEL D

BRIDGES

CULVERTS

ALL DIMENSIONS IN ft UNLESS OTHERWISE NOTED

SIGN TEXT DATA SHEET

CONTRACT NUMBER D265579

DRAWING NO. SDS-01
SHEET NO. 28

IT IS A VIOLATION OF LAW FOR ANY PERSON, UNLESS THEY ARE ACTING UNDER THE DIRECTION OF A LICENSED PROFESSIONAL ENGINEER, ARCHITECT, LANDSCAPE ARCHITECT, OR LAND SURVEYOR, TO ALTER AN ITEM IN ANY WAY. IF AN ITEM BEARING THE STAMP OF A LICENSED PROFESSIONAL IS ALTERED, THE ALTERING ENGINEER, ARCHITECT, LANDSCAPE ARCHITECT, OR LAND SURVEYOR SHALL STAMP THE DOCUMENT AND INCLUDE THE NOTATION "ALTERED BY" FOLLOWED BY THEIR SIGNATURE, THE DATE OF SUCH ALTERATION, AND A SPECIFIC DESCRIPTION OF THE ALTERATION.

NEW YORK STATE Department of Transportation

PROJECT MANAGER THOMAS N. RASTANI JR.
CHECK ROBERT SPARACINO
DRAFTING ADAM P. KLOSNER
CHECK ROBERT SPARACINO
DESIGN RYAN FITZGERALD
JOB MANAGER THOMAS N. RASTANI JR.
DESIGN SUPERVISOR DAVID P. FACCHINI
FILE NAME = 2806.52_CPH_SGN_TBL_01.dgn
DATE/TIME = 31-JUL-2025 15:04
USER = rsparacino

SIGNING NOTES:

1. SIGN LOCATIONS AS SHOWN ON PLANS ARE APPROXIMATE. THE CONTRACTOR SHALL INSTALL NEW SIGNS AND RELOCATE EXISTING SIGNS IN ACCORDANCE WITH THE MUTCD AND NYS SUPPLEMENT.
2. THE COLOR IS ONLY SHOWN WHEN THERE IS AN OPTION THAT MUST BE SPECIFIED. ORDER: (BACKGROUND/LEGEND)
3. THE AREA AND PAYMENT AREA FOR SIGNS ARE FROM THE APPLICABLE STANDARD SHEETS OR SIGN FACE LAYOUTS.

DESIGNATION & COLOR (SEE NOTE 2)	LOCATION	TEXT	ITEM	SIZE AREA (SEE NOTE 3)	PAYMENT AREA (SEE NOTE 3) TOTAL PAYMENT AREA
R3-2 WHITE/RED/BLACK	24 / 1		645.5102	24 X 24	4.0 SF
				4.0 SF	4.0 SF
R3-7L WHITE/BLACK	4, 13 / 2	LEFT LANE MUST TURN LEFT	645.5102	30 X 30	6.3 SF
				6.3 SF	12.6 SF
R5-1 WHITE/RED	24 / 1	DO NOT ENTER	645.5102	30 X 30	6.3 SF
				6.3 SF	6.3 SF
R5-2 WHITE/RED/BLACK	4, 22A, 25, 38A / 4		645.5102	24 X 24	4.0 SF
				4.0 SF	16.0 SF
R5-2aP WHITE/BLACK	4, 22A, 25, 38A / 4	EXCEPT LOCAL DELIVERY	645.5102	24 X 12	2.0 SF
				2.0 SF	8.0 SF
R7-107NY D WHITE/RED	43, 44A, 45, 47, 51 / 5	NO STOPPING ANY TIME ↔	645.5102	12 X 18	1.5 SF
				1.5 SF	7.5 SF
R7-107NY L WHITE/RED	53 / 1	NO STOPPING ANY TIME ←	645.5102	12 X 18	1.5 SF
				1.5 SF	1.5 SF
R7-107NY R WHITE/RED	39 / 1	NO STOPPING ANY TIME →	645.5102	12 X 18	1.5 SF
				1.5 SF	1.5 SF
R14-1 WHITE/BLACK	13, 36 / 2	TRUCK ROUTE	645.5102	24 X 18	3.0 SF
				3.0 SF	6.0 SF
S1-1L GREEN/BLACK	38 / 1		645.5102	36 X 36	9.0 SF
				7.3 SF	9.0 SF

DESIGNATION & COLOR (SEE NOTE 2)	LOCATION	TEXT	ITEM	SIZE AREA (SEE NOTE 3)	PAYMENT AREA (SEE NOTE 3) TOTAL PAYMENT AREA
S4-3P GREEN/BLACK	38 / 1	SCHOOL	645.5102	24 X 9	1.5 SF
				1.5 SF	1.5 SF
W14-1a L YELLOW/BLACK	29 / 1	← DEAD END	645.5102	36 X 9	2.3 SF
				2.3 SF	2.3 SF
W14-1a R YELLOW/BLACK	29 / 1	DEAD END →	645.5102	36 X 9	2.3 SF
				2.3 SF	2.3 SF
XX-XX	Y-YY / Y		645.5ZZZ	WW X HH	A.A SF
				A.A SF	A.A SF
XX-XX	Y-YY / Y		645.5ZZZ	WW X HH	A.A SF
				A.A SF	A.A SF
XX-XX	Y-YY / Y		645.5ZZZ	WW X HH	A.A SF
				A.A SF	A.A SF
XX-XX	Y-YY / Y		645.5ZZZ	WW X HH	A.A SF
				A.A SF	A.A SF
XX-XX	Y-YY / Y		645.5ZZZ	WW X HH	A.A SF
				A.A SF	A.A SF
XX-XX	Y-YY / Y		645.5ZZZ	WW X HH	A.A SF
				A.A SF	A.A SF
XX-XX	Y-YY / Y		645.5ZZZ	WW X HH	A.A SF
				A.A SF	A.A SF

OVERHEAD SIGN NUMBER (SIN)
NONE

AFFIX SEAL: ON: 8/13/2025

ALTERED BY: ON:

STATE OF NEW YORK · THOMAS N. RASTANI JR. · 087842 · LICENSED PROFESSIONAL ENGINEER

D265579

AS-BUILT REVISIONS
DESCRIPTION OF ALTERATIONS:

CITY OF ROME: BLACK RIVER BLVD. ART. RTE 46-S.H. 9383

COUNTY: ONEIDA REGION: 02

PIN 2806.52
RTE 46
UTILITY QUALITY LEVEL D

BRIDGES

CULVERTS

ALL DIMENSIONS IN ft UNLESS OTHERWISE NOTED

SIGN TEXT DATA SHEET

CONTRACT NUMBER D265579

DRAWING NO. SDS-02

SHEET NO. 29

IT IS A VIOLATION OF LAW FOR ANY PERSON, UNLESS THEY ARE ACTING UNDER THE DIRECTION OF A LICENSED PROFESSIONAL ENGINEER, ARCHITECT, LANDSCAPE ARCHITECT, OR LAND SURVEYOR, TO ALTER AN ITEM IN ANY WAY. IF AN ITEM BEARING THE STAMP OF A LICENSED PROFESSIONAL IS ALTERED, THE ALTERING ENGINEER, ARCHITECT, LANDSCAPE ARCHITECT, OR LAND SURVEYOR SHALL STAMP THE DOCUMENT AND INCLUDE THE NOTATION "ALTERED BY" FOLLOWED BY THEIR SIGNATURE, THE DATE OF SUCH ALTERATION, AND A SPECIFIC DESCRIPTION OF THE ALTERATION.

NEW YORK STATE Department of Transportation

PROJECT MANAGER THOMAS N. RASTANI JR.
CHECK ROBERT SPARACINO
DRAFTING ADAM P. KLOSNER
CHECK ROBERT SPARACINO
DESIGN RYAN FITZGERALD
JOB MANAGER THOMAS N. RASTANI JR.
DESIGN SUPERVISOR DAVID P. FACCHINI
FILE NAME = 2806.52_CPH_SGN_TBL_02.dgn
DATE/TIME = 31-JUL-2025 15:05
USER = rsparacino

CONTRACT SIGNS & REFERENCE MARKER WORK

LOCATION	SIDE	DESCRIPTION	ITEM NO. 645.81 (EA.)	POST TYPE	ITEM NO. 645.81090003 (EA.)	STRIP COLOR	ITEM NO. 646.21 (EA.)	ITEM NO. 646.31 (EA.)	ITEM NO. 647.61 (EA.)	ITEM NO. 647.83001002 (EA.)
1	RT	REMOVE ENTIRE SIGN ASSEMBLY - NO STANDING ANY TIME DOUBLE HEADED ARROW/RM 46-2602-3006 & POST							1	
2	RT	NEW - NO STANDING ANY TIME DOUBLE HEADED ARROW/RM 46-2602-3006 & POST	1	U-CHANNEL			1			
2A	LT	REMOVE ENTIRE SIGN ASSEMBLY - REFERENCE MARKER & POST								1
2B	LT	NEW - RM 46-2602-3006 & POST		1.1 LB/FT			1	1		
3	RT	REMOVE ENTIRE SIGN ASSEMBLY - LEFT LANE MUST TURN LEFT & POST							1	
4	RT	NEW - LEFT LANE MUST TURN LEFT/NO TRUCKS/ARROW ←/EXCEPT LOCAL DELIVERY & 2 POSTS	2	U-CHANNEL						
5	LT	NEW - NO STANDING ANY TIME DOUBLE HEADED ARROW & POST	1	U-CHANNEL						
6	LT	REMOVE ENTIRE SIGN ASSEMBLY - NO STANDING ANY TIME DOUBLE HEADED ARROW & POST							1	
7	LT	REMOVE ENTIRE SIGN ASSEMBLY - YELLOW OM2-2V & POST								1
8	RT	REMOVE ENTIRE SIGN ASSEMBLY - NO STANDING (ANY TIME DOUBLE ARROW) & POST							1	
9	RT	NEW - NO STANDING ANY TIME DOUBLE HEADED ARROW & POST	1	U-CHANNEL						
10	LT	REMOVE ENTIRE SIGN ASSEMBLY - YELLOW OM2-2V & POST								1
11	RT	REMOVE ENTIRE SIGN ASSEMBLY - STOP & POST							1	
12	RT	REMOVE ENTIRE SIGN ASSEMBLY - LEFT LANE MUST TURN LEFT/TRUCK ROUTE/ARROW ↑ & POST							1	
13	RT	NEW - LEFT LANE MUST TURN LEFT/TRUCK ROUTE/ARROW ↑ & POST	1	U-CHANNEL						
14	LT	REMOVE ENTIRE SIGN ASSEMBLY - STOP & POST							1	
15	LT	NEW - STOP & POST	1	U-CHANNEL						
15A	LT	REMOVE ENTIRE SIGN ASSEMBLY - SPEED LIMIT 30 & POST							1	
15B	LT	NEW - SPEED LIMIT 30 & POST	1	U-CHANNEL						
16	LT	REMOVE ENTIRE SIGN ASSEMBLY - YIELD & POST							1	
17	LT	REMOVE ENTIRE SIGN ASSEMBLY - DO NOT ENTER/NO TRUCKS/EXCEPT LOCAL DELIVERY & POST							1	
18	LT	NEW - N JAMES ST/BLACK RIVER BLVD/ RM 46-2602-3007 & POSTS	2	SQUARE TUBE			1			
19	LT	REMOVE ENTIRE SIGN ASSEMBLY - N JAMES ST/BLACK RIVER BLVD & POST							1	
20	LT	REMOVE ENTIRE SIGN ASSEMBLY - DO NOT ENTER & POST							1	
21	LT	NEW - SOUTH/RTE 46/HOSPTIAL/ARROW ↑ & POST	1	U-CHANNEL						
22	RT	REMOVE ENTIRE SIGN ASSEMBLY - RIGHT LANE MUST TURN RIGHT & POST							1	
22A	RT	NEW- NO TRUCKS/ARROW ↔/EXCEPT LOCAL DELIVERY & POST	1	U-CHANNEL						
23	RT	REMOVE ENTIRE SIGN ASSEMBLY - DO NOT ENTER / NO LEFT TURN & POST							1	
24	RT	NEW - DO NOT ENTER / NO LEFT TURN & POST	1	U-CHANNEL						
25	LT	NEW- NO TRUCKS/ARROW →/EXCEPT LOCAL DELIVERY & POST	1	U-CHANNEL						
26	LT	REMOVE ENTIRE SIGN ASSEMBLY - SOUTH/RTE 46 & POSTS							1	
27	LT	REMOVE ENTIRE SIGN ASSEMBLY - HOSPITAL / ARROW ↑ & POST							1	
28	LT	REMOVE ENTIRE SIGN ASSEMBLY - RAZZANO AVE / BLACK RIVER BLVD & POST							1	
29	LT	NEW - RAZZANO AVE / BLACK RIVER BLVD / DEAD END (LT & RT) & POSTS	2	SQUARE TUBE						
30	LT	REMOVE ENTIRE SIGN ASSEMBLY - DEAD END & POST							1	
30A	LT	NEW - NORTH/RTE 46/ARROW ← /SOUTH/RTE 46/ARROW → & POSTS	2	U-CHANNEL						
30B	RT	NEW - SOUTH/RTE 46/ARROW ← /NORTH/RTE 46/ARROW → & POSTS	2	U-CHANNEL						
30C	RT	REMOVE ENTIRE SIGN ASSEMBLY - SOUTH/RTE 46/ARROW ←/NORTH/RTE 46/ARROW →& POSTS							1	
30D	RT	REMOVE ENTIRE SIGN ASSEMBLY - WRIGHT SETTLEMENT RD & POSTS							1	
31	RT	REMOVE ENTIRE SIGN ASSEMBLY - NORTH / RTE 46 & POST							1	
32	RT	NEW - NORTH / RTE 46 & POST	1	U-CHANNEL						
32A	LT	REMOVE ENTIRE SIGN ASSEMBLY - N MADISON ST & POSTS							1	
33	RT	REMOVE ENTIRE SIGN ASSEMBLY - REFERENCE MARKER & POST								1
34	RT	NEW - RM 46-2602-3008 & POST		1.1 LB/FT			1	1		
35	LT	REMOVE ENTIRE SIGN ASSEMBLY - TRUCK ROUTE / ARROW ↑ & POST							1	
36	LT	NEW - TRUCK ROUTE / ARROW ↑ & POST	1	U-CHANNEL						
37	RT	REMOVE ENTIRE SIGN ASSEMBLY - SCHOOL (LEFT) / SCHOOL PLAQUE & POSTS							1	
38	RT	NEW - SCHOOL (LEFT) / SCHOOL PLAQUE & POSTS	2	U-CHANNEL	2	FLOR. GREEN				
38A	LT	NEW- NO TRUCKS/ARROW ↔/EXCEPT LOCAL DELIVERY & POST	1	U-CHANNEL						
39	LT	NEW - NO STOPPING ANY TIME (RIGHT ARROW) / RM 46-2602-3009 & POST	1	U-CHANNEL			1			
40	LT	REMOVE ENTIRE SIGN ASSEMBLY - NO STOPPING ANY TIME (RIGHT ARROW) / REFERENCE MARKER & POST							1	
41	RT	REMOVE ENTIRE SIGN ASSEMBLY - SPEED LIMIT 40 & POST							1	
42	RT	NEW - SPEED LIMIT 40 & POST	1	U-CHANNEL						
43	LT	NEW - NO STOPPING ANY TIME DOUBLE HEADED ARROW & POST	1	U-CHANNEL						
44	LT	REMOVE ENTIRE SIGN ASSEMBLY - NO STOPPING ANY TIME DOUBLE HEADED ARROW & POST							1	
TOTALS			28		2		5	2	27	4

AFFIX SEAL: ON: 8/13/2025

ALTERED BY: ON:

STATE OF NEW YORK · THOMAS N. RASTANI JR. · 087842 · LICENSED PROFESSIONAL ENGINEER

D265579

AS-BUILT REVISIONS
DESCRIPTION OF ALTERATIONS:

CITY OF ROME: BLACK RIVER BLVD. ART. RTE 46-S.H. 9383

COUNTY: ONEIDA REGION: 02

PIN 2806.52
RTE 46
UTILITY QUALITY LEVEL D

BRIDGES

CULVERTS

ALL DIMENSIONS IN ft UNLESS OTHERWISE NOTED

SIGN TEXT DATA SHEET

CONTRACT NUMBER D265579

DRAWING NO. SDS-03

SHEET NO. 30

IT IS A VIOLATION OF LAW FOR ANY PERSON, UNLESS THEY ARE ACTING UNDER THE DIRECTION OF A LICENSED PROFESSIONAL ENGINEER, ARCHITECT, LANDSCAPE ARCHITECT, OR LAND SURVEYOR, TO ALTER AN ITEM IN ANY WAY. IF AN ITEM BEARING THE STAMP OF A LICENSED PROFESSIONAL IS ALTERED, THE ALTERING ENGINEER, ARCHITECT, LANDSCAPE ARCHITECT, OR LAND SURVEYOR SHALL STAMP THE DOCUMENT AND INCLUDE THE NOTATION "ALTERED BY" FOLLOWED BY THEIR SIGNATURE, THE DATE OF SUCH ALTERATION, AND A SPECIFIC DESCRIPTION OF THE ALTERATION.

NEW YORK STATE Department of Transportation

PROJECT MANAGER THOMAS N. RASTANI JR.
CHECK ROBERT SPARACINO
DRAFTING ADAM P. KLOSNER
CHECK ROBERT SPARACINO
DESIGN RYAN FITZGERALD
THOMAS N. RASTANI JR.
JOB MANAGER
DESIGN SUPERVISOR DAVID P. FACCHINI
FILE NAME = 2806.52_CPH_SGN_TBL_03.dgn
DATE/TIME = 31-JUL-2025 15:07
USER = rsparacino

CONTRACT SIGNS & REFERENCE MARKER WORK

LOCATION	SIDE	DESCRIPTION	ITEM NO. 645.81 (EA.)	POST TYPE	ITEM NO. 645.81090003 (EA.)	STRIP COLOR	ITEM NO. 646.21 (EA.)	ITEM NO. 646.31 (EA.)	ITEM NO. 647.61 (EA.)	ITEM NO. 647.83001002 (EA.)
44A	LT	NEW - NO STOPPING ANY TIME DOUBLE HEADED ARROW & POST	1	U-CHANNEL						
44B	LT	REMOVE ENTIRE SIGN ASSEMBLY - NO STOPPING ANY TIME DOUBLE HEADED ARROW & POST							1	
45	LT	NEW - NO STOPPING ANY TIME DOUBLE HEADED ARROW & POST	1	U-CHANNEL						
46	LT	REMOVE ENTIRE SIGN ASSEMBLY - NO STOPPING ANY TIME DOUBLE HEADED ARROW & POST							1	
47	LT	NEW - NO STOPPING ANY TIME DOUBLE HEADED ARROW & POST	1	U-CHANNEL						
48	LT	REMOVE ENTIRE SIGN ASSEMBLY - NO STOPPING ANY TIME DOUBLE HEADED ARROW & POST							1	
49	RT	REMOVE ENTIRE SIGN ASSEMBLY - REFERENCE MARKER & POST								1
50	RT	NEW - RM 46-2602-3010 & POST		1.1 LB/FT			1	1		
51	LT	NEW - NO STOPPING ANY TIME DOUBLE HEADED ARROW & POST	1	U-CHANNEL						
52	LT	REMOVE ENTIRE SIGN ASSEMBLY - NO STOPPING ANY TIME DOUBLE HEADED ARROW & POST							1	
53	LT	NEW - NO STOPPING ANY TIME (LEFT ARROW) & POST	1	U-CHANNEL						
54	LT	REMOVE ENTIRE SIGN ASSEMBLY - NO STOPPING ANY TIME (LEFT ARROW) & POST							1	
55	LT	NEW - SCENIC BYWAY / BLACKRIVER TRAIL / ARROW LT & RT	1	U-CHANNEL						
56	RT	NEW - SCENIC BYWAY / BLACKRIVER TRAIL / ARROW LT & RT	1	U-CHANNEL						
57	LT	NEW - SCENIC BYWAY / BLACKRIVER TRAIL / ARROW LT & RT	1	U-CHANNEL						
TOTALS			8		0		1	1	5	1

AFFIX SEAL: ON: 8/13/2025

ALTERED BY: ON:

STATE OF NEW YORK
THOMAS N. RASTANI JR.
087842
LICENSED PROFESSIONAL ENGINEER

D265579

AS-BUILT REVISIONS
DESCRIPTION OF ALTERATIONS:

CITY OF ROME: BLACK RIVER BLVD. ART. RTE 46-S.H. 9383

COUNTY: ONEIDA REGION: 02

PIN 2806.52
RTE 46
UTILITY QUALITY LEVEL D

BRIDGES

CULVERTS

ALL DIMENSIONS IN ft UNLESS OTHERWISE NOTED

SIGN TEXT DATA SHEET

CONTRACT NUMBER D265579

DRAWING NO. SDS-04

SHEET NO. 31

IT IS A VIOLATION OF LAW FOR ANY PERSON, UNLESS THEY ARE ACTING UNDER THE DIRECTION OF A LICENSED PROFESSIONAL ENGINEER, ARCHITECT, LANDSCAPE ARCHITECT, OR LAND SURVEYOR, TO ALTER AN ITEM IN ANY WAY. IF AN ITEM BEARING THE STAMP OF A LICENSED PROFESSIONAL IS ALTERED, THE ALTERING ENGINEER, ARCHITECT, LANDSCAPE ARCHITECT, OR LAND SURVEYOR SHALL STAMP THE DOCUMENT AND INCLUDE THE NOTATION "ALTERED BY" FOLLOWED BY THEIR SIGNATURE, THE DATE OF SUCH ALTERATION, AND A SPECIFIC DESCRIPTION OF THE ALTERATION.

NEW YORK STATE Department of Transportation

DESIGN SUPERVISOR DAVID P. FACCHINI JOB MANAGER THOMAS N. RASTANI JR. DESIGN RYAN FITZGERALD CHECK ROBERT SPARACINO DRAFTING ADAM P. KLOSNER CHECK ROBERT SPARACINO PROJECT MANAGER THOMAS N. RASTANI JR.

FILE NAME = 2806.52_CPH_SGN_TBL_04.dgn
DATE/TIME = 31-JUL-2025 15:08
USER = rsparacino

TRAFFIC SIGNAL GENERAL NOTES

A. GENERAL

A1. OVERHEAD SIGNAL CLEARANCE ABOVE THE HIGHPOINT OF THE PAVEMENT SHALL BE 16.5 FT. FOR NEW SIGNAL POLE INSTALLATIONS AND 16.0 FT. FOR EXISTING POLE LOCATIONS.

A2. CLARIFICATION OF THE CONTRACTOR'S RESPONSIBILITY REGARDING MAINTAINING LOOP DETECTION UNDER ITEM 619.1613 "MAINTAIN TRAFFIC SIGNAL EQUIPMENT": THE CONTRACTOR SHALL MAINTAIN ALL EXISTING VEHICLE AND PEDESTRIAN DETECTION WITH REASONABLE CARE. UNLESS OTHERWISE NOTED, THE MAXIMUM LENGTH OF TIME THAT AN INTERSECTION CAN BE WITHOUT DETECTION IS TWO (2) WEEKS. IF DETECTION IS NOT RESTORED WITHIN THIS TIME FRAME, IT WILL BE THE CONTRACTOR'S RESPONSIBILITY TO ESTABLISH VEHICLE DETECTION AT HIS EXPENSE. THE STATE OF NEW YORK WILL PAY FOR RE-ESTABLISHING THE VEHICLE DETECTION ONLY IF THE ENGINEER DETERMINES THAT THE CONTRACTOR WAS NOT ABLE TO AVOID DAMAGING THEM, EVEN WITH REASONABLE CARE. IN LIEU OF IN-PAVEMENT PRESENCE DETECTION, MICROWAVE PRESENCE DETECTORS MAY TEMPORARILY BE FURNISHED AND INSTALLED BY THE CONTRACTOR, PENDING APPROVAL BY THE DEPARTMENT.

A3. UNDER ITEM 619.1613 (REQUIREMENT C) THE CONTRACTOR SHALL BE REQUIRED TO MAINTAIN THE FOLLOWING TRAFFIC SIGNAL EQUIPMENT AFFECTED BY, OR INCLUDED IN, THIS CONTRACT: SIGNAL NUMBERS:

02-26-38 - ROUTE 46 AT WRIGHT SETTLEMENT RD.

THE DURATION OF THIS MAINTENANCE SHALL BEGIN ON THE DATE OF CONTRACT AWARD AND CONTINUE THROUGH ACCEPTANCE OF THE CONTRACT BY THE DEPARTMENT, REGARDLESS OF WHEN ACTUAL WORK AT A SIGNAL BEGINS.

NO CHANGES IN THE SIGNAL OPERATION OR TIMING PLANS SHALL BE PERMITTED WITHOUT APPROVAL OF THE DEPARTMENT.

A4. THE CONTRACTOR SHALL REQUEST PERMISSION FROM THE DEPARTMENT TO ENTER INTO ANY EXISTING TRAFFIC SIGNAL CONTROLLER CABINET, TO DO ANY WORK ON AN EXISTING TRAFFIC SIGNAL, OR BEFORE ENERGIZING ANY NEW TRAFFIC SIGNAL INSTALLATION.

A5. THE CONTRACTOR SHALL STAKE OUT AND VERIFY ALL COMPONENTS OF THE TRAFFIC SIGNAL SYSTEM PRIOR TO INSTALLATION. N.Y.S. DEPARTMENT OF TRANSPORTATION SHALL APPROVE FINAL PLACEMENT. FINAL LOCATION OF SIGNAL POLES/HEADS MAY REQUIRE MODIFICATION TO THE TYPE AND QUANTITY OF SIGNAL HEAD BRACKET ASSEMBLIES (EXAMPLE: (2) ONE-WAY BRACKETS MAY BE REQUIRED RATHER THAN (1) TWO-WAY BRACKET, AS SHOWN ON PLANS).

A6. PRIOR TO THE COMMENCEMENT OF ANY WORK ON TRAFFIC SIGNALS, AN ON-SITE PRE-CONSTRUCTION MEETING SHALL TAKE PLACE BETWEEN THE CONTRACTOR, THE DEPARTMENT, AND APPROPRIATE UTILITY COMPANIES AT THE PROJECT ENGINEER'S REQUEST.

A7. REFER TO THE MISCELLANEOUS DETAIL SHEETS IN CONTRACT PLANS FOR ADDITIONAL INFORMATION.

A8. ALL BRACKETS SHALL BE WELDED TO STEEL POLES USING CONTINUOUS FILLET WELD, ALL WELDS NEED TO BE GALVANIZED. NO BANDING.

A9. GALVANIZED 4" C CHANNEL SHALL BE USED WHEN MOUNTING CABINET TO POLE. BOLT CABINET TO BRACKETS WITH 5/16" X 2" LONG (MIN.) BOLTS. SEE STANDARD SHEET 680-05 NOTES.

A10. THE CONTRACTOR SHALL SUPPLY ALL WORK ZONE TRAFFIC CONTROL IN ACCORDANCE WITH ITEM 619.01-BASIC WORK ZONE TRAFFIC CONTROL, THE CONTRACT DOCUMENTS, THE CURRENT MANUAL OF UNIFORM TRAFFIC CONTROL DEVICES (MUTCD) AND ITS NYS SUPPLEMENT. THIS WILL BE REQUIRED FOR ALL INSPECTIONS OR CORRECTIVE ACTIONS ON NEWLY INSTALLED OR MODIFIED SIGNALS. THIS SHALL INCLUDE ALL NECESSARY SIGNING, ATTENUATORS, LANE CLOSURES OR ANY INCIDENTALS REQUIRED TO PROPERLY MAINTAIN TRAFFIC. THIS WILL BE TERMINATED WHEN THE SIGNAL IS ACCEPTED BY THE REGIONAL TRAFFIC SAFETY AND MOBILITY GROUP.

A11. FOUNDATION INFO STAMP - THE SIGNAL POLE MANUFACTURER SHALL FABRICATE A 3"HIGH X 4"WIDE X 1/8"THICK GALVANIZED STEEL PLATE WITH A MINIMUM OF TWO POSTS FOR EMBEDMENT IN EACH CONCRETE TRAFFIC SIGNAL POLE FOUNDATION. THE FOLLOWING INFORMATION SHALL BE STAMPED ON THE FOUNDATION PLATE IN 1/2" LETTERS TO SUCH A DEPTH AS TO BE CLEARLY VISIBLE THROUGH SUBSEQUENT GALVANIZING.

DESIRED INFORMATION
FOUNDATION TYPE: X-#
MAXIMUM FOOTING MOMENT: ### FT-KIPS
YEAR OF INSTALLATION: 20##

B. CONDUIT & WIRING

B1. ALL POLE FOUNDATIONS SHALL HAVE A MINIMUM OF (1) 3 NPS OR 4 NPS DIAMETER CONDUIT SWEEP, AS SHOWN ON THE PLANS, OR AS DIRECTED BY THE ENGINEER.

B2. CONDUIT THAT IS JACKED OR EXPOSED TO ATMOSPHERE SHALL BE CLASS 1 RIGID METAL STEEL.

B3. ALL METAL CONDUITS, NEW AND/OR EXISTING, SHALL BE BONDED WITH A #6 BARE STRANDED COPPER WIRE OR AS DIRECTED BY THE ENGINEER.

B4. UNLESS NOTED SPECIFICALLY IN THE PLANS, CONDUIT INSTALLED ON THIS PROJECT WILL BE PLACED AT A DEPTH OF 24". THIS EXCEEDS THE 18" DEPTH SHOWN ON THE STANDARD SHEETS.

B5. ALL COUPLINGS AND BUSHINGS SHALL BE MECHANICALLY THREADED. COMPRESSION OR SLIP TYPE COUPLINGS OR BUSHINGS SHALL NOT BE ALLOWED.

C. PULLBOXES

C1. THE DRAINAGE BED PLACED BELOW PULL BOXES, AS SHOWN ON STANDARD SHEET 680-04, SHALL BE INCREASED FROM 1 FT. TO 2 FT. ONLY CRUSHED STONE SHALL BE USED. COST SHALL BE INCLUDED IN THE PRICE BID FOR ITEM 680.510501. ALL PULL BOXES SHALL HAVE A BASE.

C2. PRIOR TO ACCEPTANCE OF THE NEWLY INSTALLED OR MODIFIED PULLBOXES, ALL NECESSARY CODING/LABELING SHALL BE ON THE WIRES AS REQUIRED, AND ALL WIRES SHALL BE NEATLY COILED AND SECURED TO "J" HOOKS WITH A PLASTIC TIE.

D. SIGNAL SECTIONS - VEHICLE AND PEDESTRIAN

D1. ALL VEHICLE TRAFFIC SIGNAL SECTIONS SHALL BE PROVIDED WITH OPEN TUNNEL VISORS. ALL PEDESTRIAN TRAFFIC SIGNAL SECTIONS SHALL BE PROVIDED WITH CAP VISORS.

D2. UNLESS SPECIFICALLY NOTED IN THE CONTRACT DOCUMENTS, ALL POLYCARBONATE VEHICLE AND PEDESTRIAN SIGNAL SECTIONS (ITEM 680.11131014 AND ITEM 680.11141014) SHALL BE SUPPLIED AS DARK GREEN.

D3. REINFORCING PLATES SHALL BE INSTALLED ON ALL TOP SECTIONS AND LOWER SECTIONS OF POLYCARBONATE HANGING HEADS IF THE LOWER SECTION HEAD IS ATTACHED TO AN ASSEMBLY SUCH AS A LOWER TETHER OR PIPE BRACKET, ALL LOWER SECTIONS OF POST MOUNTED 3-SECTION TRAFFIC SIGNAL HEADS, AND AS DIRECTED BY THE ENGINEER. ALL REINFORCING PLATES SHALL BE MOUNTED INSIDE THE SIGNAL SECTIONS. EXACT DIMENSIONS, MATERIAL COMPOSITION AND INSTALLATION OF THE PLATES WILL BE AS PER THE TRAFFIC SIGNAL HEAD MANUFACTURER. (NOTE: THE NIPPLE USED FOR THE CONNECTION TO THE SIGNAL HEAD BODY WILL NEED TO BE LONGER TO ACCOMMODATE THE EXTRA THICKNESS OF THE REINFORCEMENT PLATE.) THE COST OF THE REINFORCING PLATES SHALL BE INCLUDED IN THE PRICE BID FOR ITEM 680.11131014 AND ITEM 680.11141014.

D4. A REINFORCING PLATE IS REQUIRED FOR ALL PEDESTRIAN HEADS THAT ARE POST TOP MOUNTED IN THE LOWER SECTION. THE COST OF REINFORCING PLATES SHALL BE INCLUDED IN PRICE BID FOR ITEM 680.11131014 AND ITEM 680.11141014.

D5. TRAFFIC SIGNAL SECTION DOOR HINGES SHALL BE LOCATED ON THE OUTSIDE OF A 5-SECTION HEAD SO THAT THE DOORS OPEN OUTWARD, AWAY FROM ADJACENT DOORS.

F. SIGNS

F1. SIGN NUMBERS SHOWN REFER TO THE CURRENT MANUAL OF UNIFORM TRAFFIC CONTROL DEVICES (MUTCD) AND THE NEW YORK STATE SUPPLEMENT.

F2. OVERHEAD LANE SIGNS SHALL IDEALLY BE CENTERED OVER THEIR RESPECTIVE LANES.

F3. WITH THE ADDITION OF A NEW 3-COLOR TRAFFIC SIGNAL, TEMPORARY "SIGNAL AHEAD" WARNING SIGNS (W3-3: ORANGE BACKGROUND) SHALL BE INSTALLED ON ALL APPROACHES TO THE INTERSECTION. THE SIGNS ARE TO BE UNCOVERED THE DAY THE SIGNAL IS PUT INTO OPERATION, AND PRIOR TO THE INITIATION OF 3-COLOR OPERATION. THE SIGNS SHALL REMAIN IN PLACE FOR A MINIMUM OF 30 DAYS. THE SIGNS SHALL NOT BE IN PLACE FOR MORE THAN 60 DAYS. SUPPLEMENTAL AUXILIARY FLAGS SHALL BE PLACED ON THE SIGNS FOR ADDED VISIBILITY. SIGN LOCATION SHOULD BE BASED ON CURRENT MUTCD TABLE 2C-4, AND ACTUAL FIELD CONDITIONS.

F4. THE CONTRACTOR IS ADVISED BALANCE ADJUSTERS ARE NOT REQUIRED ON TRAFFIC SIGNAL HEADS. THEY ARE REQUIRED ON SIGNING.

G. MAST ARM SIGNALS

G1. MAST ARM SIGNAL POLES SHALL UTILIZE ASTRO-BRAC MOUNTING ASSEMBLIES FOR SIGNAL HEADS AND TYPE G MOUNTS FOR SIGNS.

H. PEDESTRIAN

H1. ALL PEDESTRIAN PUSH BUTTONS SHALL CONFORM TO THE AMERICANS WITH DISABILITIES ACT (ADA) REQUIREMENTS. COST SHALL BE INCLUDED IN THE PRICE BID FOR ITEM 680.11131014 AND 680.11141014.

H2. ALL NON-ORNAMENTAL, PEDESTRIAN SIGNAL POLES SHALL BE CONSTRUCTED OF ALUMINUM.

H3. ALL PEDESTRIAN HEADS SHALL BE PLACED AT 10 FT HEIGHT.

I. REMOVALS

I1. EXISTING TRAFFIC SIGNAL PULLBOXES AND FOUNDATIONS, OUTSIDE THE ROADWAY SECTION, SHALL BE REMOVED/EXCAVATED TO A DEPTH OF 6 IN. BELOW EXISTING GRADE AND BACKFILLED WITH MATERIAL IN KIND. THE CHARACTER AND CONDITION SHALL MATCH THAT SURROUNDING THE STRUCTURE, AS ORDERED BY THE ENGINEER. WITHIN THE ROADWAY, THE REMOVAL/EXCAVATION SHALL BE MADE TO A DEPTH OF 1 FT. BELOW THE TOP OF SUBGRADE AND BACKFILLED WITH SUITABLE MATERIAL. COST SHALL BE INCLUDED IN THE PRICE BID FOR ITEM 680.78000001.

I2. ALL REMOVED TRAFFIC SIGNAL EQUIPMENT SHALL BE DELIVERED TO THE REGIONAL SIGNAL MAINTENANCE SHOP

J. UTILITIES

J1. THE CONTRACTOR SHALL FURNISH AND INSTALL ELECTRIC POWER METER BASES ON NEW TRAFFIC SIGNAL INSTALLATIONS, AS SHOWN ON STANDARD SHEET 680-05.

J2. THE CONTRACTOR SHALL COORDINATE ALL UTILITY INVOLVEMENT (INCLUDING POWER SUPPLY/SERVICE ORDERS/METERING) AND/OR CONFLICTS WITH THE APPROPRIATE UTILITY COMPANY.

J3. CLEARANCE DISTANCES TO ELECTRICAL UTILITY LINES SHALL BE IN COMPLIANCE WITH CURRENT REGULATIONS OF THE UNITED STATES OCCUPATIONAL SAFETY AND HEALTH ADMINISTRATION (29 CFR PARTS 1910 AND 1926), NEW YORK INDUSTRIAL CODE (12 NYCRR PART 23), THE NATIONAL ELECTRICAL SAFETY CODE, AND THE N.Y.S. HIGH VOLTAGE PROXIMITY ACT (HVPA).

J4. ALL SERVICE WIRE FOR ESTABLISHING UTILITY CONNECTION SHALL BE THREE CONDUCTOR, 6 AWG AND SHALL BE FURNISHED WITH 2 BLACK AND 1 WHITE CABLE. PRIOR TO THE INSTALLATION IT SHALL BE CONFIRMED WITH THE APPROPRIATE POWER COMPANY THAT IT MEETS THE REQUIREMENTS NEEDED. TO BE PAID FOR UNDER ITEM 680.950306.

J5. RISERS LOCATED AT THE UTILITY POLE SHALL HAVE FACTORY SWEEPS AND CONDUIT 10 FT. ABOVE GROUND WITH 4 STEEL CONDUITS, CLAMPS AND BUSHINGS TO BE PAID FOR UNDER ITEM 680.520106.

J6. POWER SERVICE TO SIGNALS WILL BE IN COMPLIANCE WITH REQUIREMENTS OF THE N.Y.S. BOARD OF FIRE UNDERWRITERS.

J7. UNLESS NOTED OTHERWISE IN THE CONTRACT DOCUMENTS, THE CONTRACTOR SHALL BE RESPONSIBLE FOR ALL FEES, SERVICE CHARGES, AND INSPECTIONS NECESSARY TO COMPLETE THE INSTALLATION AND ENERGIZATION OF ALL ITEMS IN THE CONTRACT.

AFFIX SEAL: ON: 8/20/2025

ALTERED BY: ON:

STATE OF NEW YORK · THOMAS N. RASTANI JR. · 087842 · LICENSED PROFESSIONAL ENGINEER

D265579

AS-BUILT REVISIONS
DESCRIPTION OF ALTERATIONS:

CITY OF ROME: BLACK RIVER BLVD. ART. RTE 46-S.H. 9383

COUNTY: ONEIDA REGION: 02

PIN 2806.52
RTE 46
UTILITY QUALITY LEVEL D

BRIDGES

CULVERTS

ALL DIMENSIONS IN ft UNLESS OTHERWISE NOTED

TRAFFIC SIGNAL NOTES

CONTRACT NUMBER D265579

DRAWING NO. TSN-01

SHEET NO. 32

IT IS A VIOLATION OF LAW FOR ANY PERSON, UNLESS THEY ARE ACTING UNDER THE DIRECTION OF A LICENSED PROFESSIONAL ENGINEER, ARCHITECT, LANDSCAPE ARCHITECT, OR LAND SURVEYOR, TO ALTER AN ITEM IN ANY WAY. IF AN ITEM BEARING THE STAMP OF A LICENSED PROFESSIONAL IS ALTERED, THE ALTERING ENGINEER, ARCHITECT, LANDSCAPE ARCHITECT, OR LAND SURVEYOR SHALL STAMP THE DOCUMENT AND INCLUDE THE NOTATION "ALTERED BY" FOLLOWED BY THEIR SIGNATURE, THE DATE OF SUCH ALTERATION, AND A SPECIFIC DESCRIPTION OF THE ALTERATION.

NEW YORK STATE Department of Transportation

DESIGN SUPERVISOR DAVID P. FACCHINI JOB MANAGER THOMAS N. RASTANI JR. DESIGN ADAM P. KLOSNER CHECK MIKE P. JONES DRAFTING ADAM P. KLOSNER CHECK MIKE P. JONES PROJECT MANAGER THOMAS N. RASTANI JR.

FILE NAME = 280652_cph_tsn.dgn
DATE/TIME = 31-JUL-2025 15:10
USER = rsparacino

LIGHTING METER CABINET NOTES: ALL NOTES SHALL BE INCLUDED IN THE PRICE BID FOR ITEM 670.42110002 UNLESS NOTED BELOW.

WHEN WORKING IN AN AREA NOT OTHERWISE DISTURBED BY THE CONTRACT WORK, NOTES 1-4 APPLY:

1. AREA EXCAVATED TO PLACE CABINET SHALL BE RESTORED TO ORIGINAL CONDITION. THIS MAY INCLUDE SEEDING AND TOPSOIL: ALL ROCKS SHALL BE REMOVED FROM THIS AREA.
2. IF THE AREA DISTURBED BY THE TRENCHING IS ON EXISTING SEEDED AREA, THE TOP 4" OF TRENCH BACK FILL SHALL BE TOPSOIL AND THE SURFACE SHALL BE SEEDED.
3. OTHER AREAS (ASPHALT, CONCRETE, ETC.) SHALL BE REPLACED IN KIND WITH THICKNESS MATCHING EXISTING MATERIALS.
4. WHEN WORKING IN AN AREA TO BE SURFACE TREATED UNDER OTHER CONTRACT ITEMS, THE TRENCHING AND BACK FILL WILL BE PAID FOR UNDER ITEM 206.03 AND THE SURFACE TREATMENT UNDER SEPARATE CONTRACT ITEMS.
5. A 20 AMP, 110 VOLT, GROUND FAULT CIRCUIT INTERRUPTER DUPLEX RECEPTACLE SHALL BE MOUNTED AS EXPLAINED IN PROJECT DOCUMENTS. THE RECEPTACLE SHALL BE U.L. LISTED ACCORDING TO E-48380 AND U.L. 943CLASS A AND U.L. 498. THE RECEPTACLE SHALL HAVE A CAST ALUMINUM, LOCKABLE, U.L. LISTED COVER (LOCK AND 3 KEYS SHALL BE SUPPLIED AND PLACED IN ENCLOSURE) THAT IS SUITABLE FOR WET LOCATIONS WHILE IN USE AND COMPLIES WITH NEC ARTICLE 410-57 (B), THE COVER SHALL ACCEPT MOST COMMON CORDS SETS UP TO 3/8 " DIAMETER (14/3), THE RECEPTACLE AND COVER SHALL MOUNT TO AN OUTLET OPENING, IN THE POST SHAFT, WITH A GASKET AND STAINLESS STEEL SCREWS. CONNECT TO DEDICATED 120V, 20A BREAKER WITH #12AWG CONDUCTORS.
6. THE CONTRACTOR SHALL COORDINATE WITH THE LOCAL UTILITY COMPANY FOR AN ELECTRIC SERVICE ORDER.
7. A 2 INCH STEEL RISER ASSEMBLY SHALL BE PLACED 10 FEET UP EXISTING UTILITY POLE AND ATTACHED PROPERLY. FINAL LOCATION OF RISER ON THE UTILITY POLE SHALL BE GIVEN TO THE CONTRACTOR FROM THE REGIONAL UTILITY ENGINEER. THE CONTRACTOR SHALL FOLLOW UTILITY COMPANIES POLICY FOR INSTALLATION REQUIREMENTS. SEE DETAIL FOR SERVICE LOCATIONS.
8. INSTALL SERVICE ENTRANCE GROUND IN ACCORDANCE WITH NATIONAL ELECTRICAL CODE. PROVIDE #4 BARE COPPER WIRELOOP BETWEEN GROUND RODS AND RISER LEAD TO LOAD CENTER. GROUND RODS SHALL BE 6'-0" MIN APART. GROUND RODS SHALL BE IN DIRECT EARTH CONTACT OF 10'-0" MIN.
9. THE CONTRACTOR SHALL BE RESPONSIBLE FOR ALL FEES, INSPECTIONS NEEDED TO COMPLETE INSTALLATION OF LIGHTING METER CABINET.
10. CONDUIT SHALL HAVE PULL STRING IF THE CONDUIT IS NOT USED AT TIME OF INSTALLATION.
11. ALL THE WORK ASSOCIATED TO THE COMPLETE INSTALLATION OF THE PROPOSED DISCONNECT AND METER BOX BETWEEN THE EXISTING UTILITY POLE TO THE PROPOSED PULL BOX SHALL BE INCLUDED IN THE PRICE BID FOR ITEM 670.42110002 (LIGHTING METER CABINET WITH ALL COMPONENTS).
12. CABINET SHALL BE PLACED SO CABINET IS FURTHER FROM THE HIGHWAY THAN THE METER.
13. ENCLOSURE SHALL HAVE THE FOLLOWING: MANUFACTURED TO NEMA 3R SPECIFICATIONS, FREE STANDING ENCLOSURE, SEAL WELDED CONSTRUCTION DOUBLE FLANGED DOOR SEAL, SST 3 POINT PAD LOCKABLE LATCH SYSTEM WITH NYLON ROLLERS, TWO POSITION DOOR STOP ROD ASSEMBLY,#2 DOOR LOCK WITH 4 KEYS, HEAVY DUTY SST HINGE, 1/2" X 2" CLOSE CELL NEOPRENE GASKET, 3/8 X 2 WELD STUDS PROVIDED FOR BACK PANEL(BACK PANEL USUALLY NOT PROVIDED). POWDER COATED, FEDERAL STANDARD COLOR 595 COLOR FS37040 BLACK).
14. ALL CONDUITS SHALL HAVE 90 DEGREE FACTORY SWEEPS.
15. ALL EXCAVATION SHALL BE INCLUDED IN THE PRICE BID FOR ITEM 670.42110002.
16. FOUNDATIONS FOR CABINETS SHALL BE SQUARE SHAPED, 2'X2'X6'. THE CONTRACTOR SHALL REFER TO THE STANDARD SHEETS FOR FOUNDATION DETAILS.
17. 5'X5'X6" CRUSHER RUN MATERIAL, WORK PAD SHALL BE 5'X5'X4" REINFORCED CONCRETE WORKING PAD.
18. ALL ELECTRICAL WORK SHALL BE PERFORMED IN ACCORDANCE WITH THE NATIONAL ELECTRICAL CODE (NFPA70 & NFPA70E).
19. ALL PARTS AND PIECES SHALL BE APPROVED BY THE EIC AND THE REGIONAL UTILITY ENGINEER.

LOCATIONS FOR ITEM 670.42110002 LIGHTING METER CABINET WITH ALL COMPONENTS:	
SHEET No.	LOCATIONS
ST2-01	PART 1 AND PART 1A

PROPOSED SIGNAL CIRCUIT CONFIGURATION			
POWER POINT	CIRCUIT	PHASE	LIGHTS
PART 1 & PART 1A	1	NA	PROPOSED SIGNAL CABINET
	2	NA	SPARE
	3	NA	SPARE
	4	NA	SPARE
	5	NA	SPARE
	6	NA	SPARE
	7	NA	SPARE
	8	NA	SPARE
	9	NA	SPARE
	10	NA	SPARE
	11	NA	SPARE
	12	NA	OUTLET

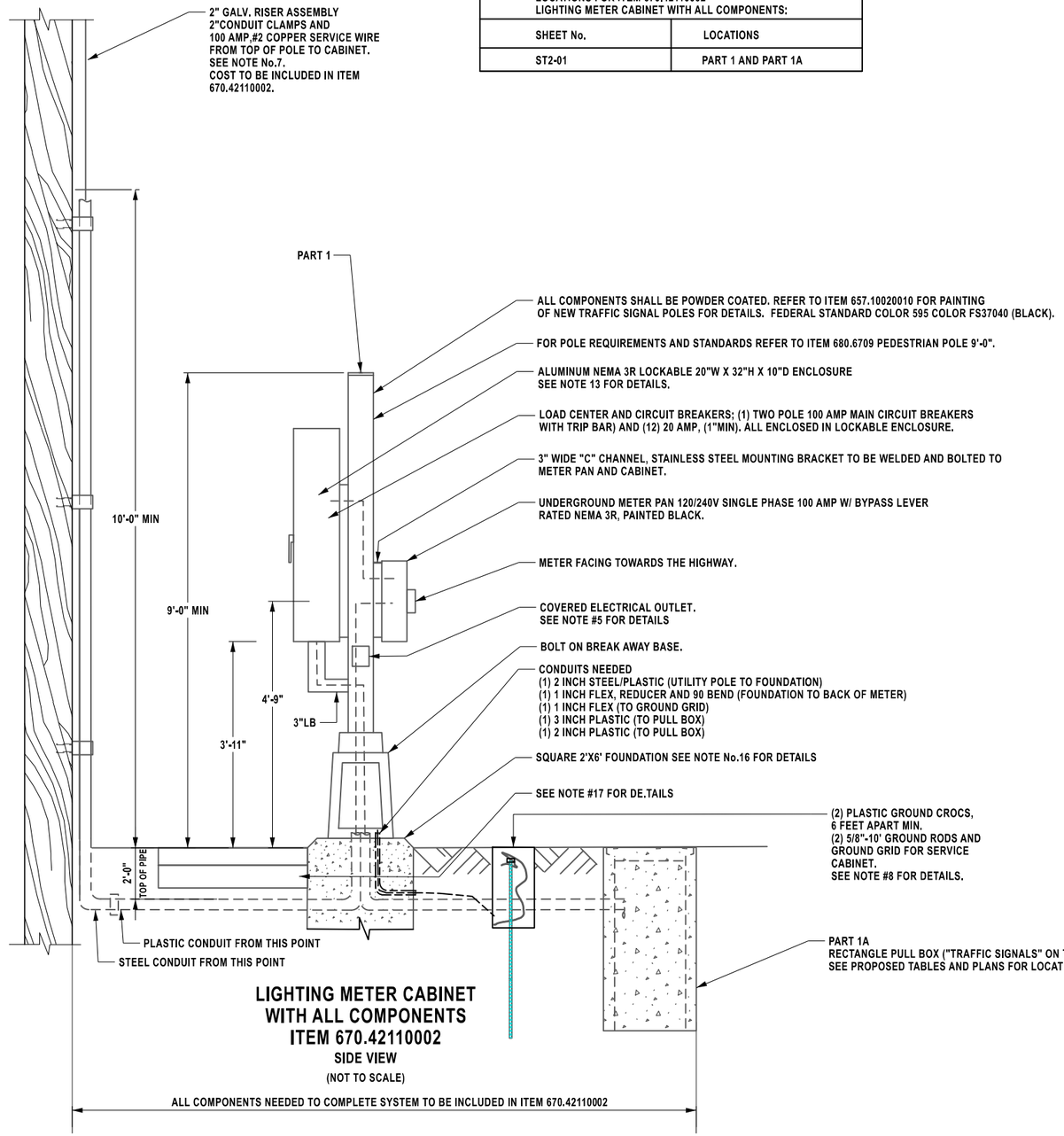

LIGHTING METER CABINET WITH ALL COMPONENTS ITEM 670.42110002

SIDE VIEW

(NOT TO SCALE)

ALL COMPONENTS NEEDED TO COMPLETE SYSTEM TO BE INCLUDED IN ITEM 670.42110002

AFFIX SEAL: ON: 8/20/2025

ALTERED BY: ON:

STATE OF NEW YORK · THOMAS N. RASTANI JR. · 087842 · LICENSED PROFESSIONAL ENGINEER

D265579

AS-BUILT REVISIONS
DESCRIPTION OF ALTERATIONS:

CITY OF ROME: BLACK RIVER BLVD. ART. RTE 46-S.H. 9383

COUNTY: ONEIDA REGION: 02

PIN 2806.52
RTE 46
UTILITY QUALITY LEVEL D

BRIDGES

CULVERTS

ALL DIMENSIONS IN ft UNLESS OTHERWISE NOTED

TRAFFIC SIGNAL DETAIL

CONTRACT NUMBER D265579

DRAWING NO. TSD-01

SHEET NO. 33

IT IS A VIOLATION OF LAW FOR ANY PERSON, UNLESS THEY ARE ACTING UNDER THE DIRECTION OF A LICENSED PROFESSIONAL ENGINEER, ARCHITECT, LANDSCAPE ARCHITECT, OR LAND SURVEYOR, TO ALTER AN ITEM IN ANY WAY. IF AN ITEM BEARING THE STAMP OF A LICENSED PROFESSIONAL IS ALTERED, THE ALTERING ENGINEER, ARCHITECT, LANDSCAPE ARCHITECT, OR LAND SURVEYOR SHALL STAMP THE DOCUMENT AND INCLUDE THE NOTATION "ALTERED BY" FOLLOWED BY THEIR SIGNATURE, THE DATE OF SUCH ALTERATION, AND A SPECIFIC DESCRIPTION OF THE ALTERATION.

NEW YORK STATE Department of Transportation

PROJECT MANAGER THOMAS N. RASTANI JR. · CHECK MIKE P. JONES · DRAFTING ADAM P. KLOSNER · CHECK MIKE P. JONES · DESIGN ADAM P. KLOSNER · JOB MANAGER THOMAS N. RASTANI JR. · DESIGN SUPERVISOR DAVID P. FACCHINI

FILE NAME = 280652_CPH_TSD_01.dgn
DATE/TIME = 31-JUL-2025 15:11
USER = rsparacino

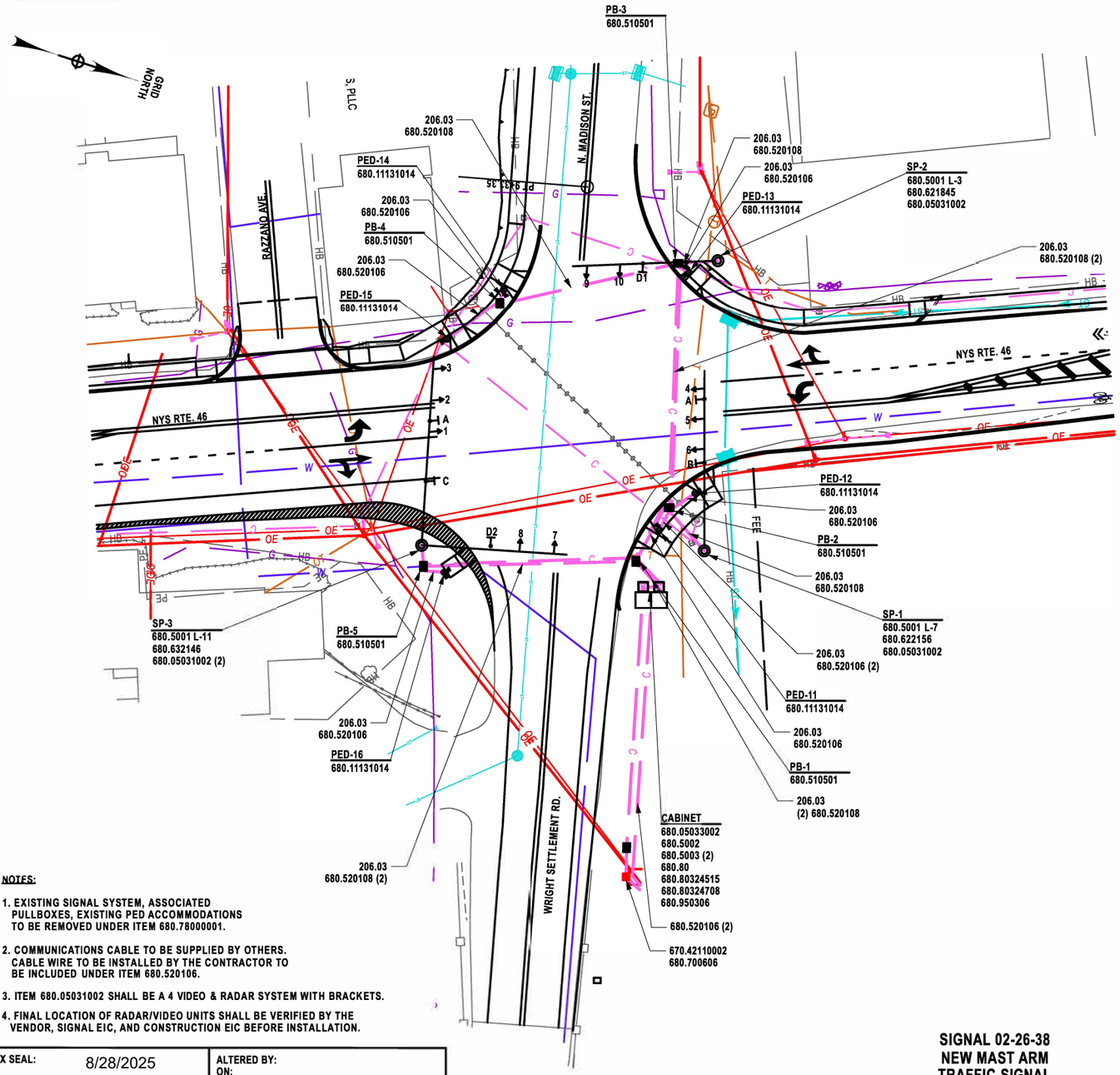

ITEMS TO ADDRESS POSSIBLE CONTAMINATION IN THE NORTHWEST QUADRANT

203.98080015
205.0201
205.03
205.050201

SIGNAL HEAD CONFIGURATIONS

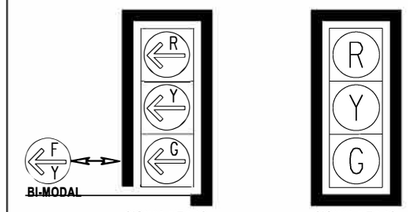

SIGNAL HEADS 1 & 4 12" BALLS

SIGNAL HEADS 2, 3, 5, 6, 7, 8, 9, 10 12" BALLS

ITEM LIST

(30) 680.810308
(30) 680.810601
(10) 680.81210004
(10) 680.8199

(08) RED BALL
(08) YELLOW BALL
(08) GREEN BALL
(02) RED ARROW
(02) YELLOW ARROW
(02) BI-MODAL

SIGN TEXT DATA SHEET

MUTCD DESIGNATION	LOCATION	TEXT	DIMENSIONS	ITEM NUMBER	QUANTITY
R03-05L	A	ONLY	30"x 36"	680.8207	2 EA
D1-2	B	← N Madison St Wright Settlement Rd →	138"x 36"	645.61	34.5 SF
D1-2	C	← Wright Settlement Rd N Madison St →	138"x 36"	645.61	34.5 SF
D3-1a	D1, D2	46 Black River Blvd	108"x 18"	645.61	27 SF

NOTES:

1. EXISTING SIGNAL SYSTEM, ASSOCIATED PULLBOXES, EXISTING PED ACCOMMODATIONS TO BE REMOVED UNDER ITEM 680.78000001.
2. COMMUNICATIONS CABLE TO BE SUPPLIED BY OTHERS. CABLE WIRE TO BE INSTALLED BY THE CONTRACTOR TO BE INCLUDED UNDER ITEM 680.520106.
3. ITEM 680.05031002 SHALL BE A 4 VIDEO & RADAR SYSTEM WITH BRACKETS.
4. FINAL LOCATION OF RADAR/VIDEO UNITS SHALL BE VERIFIED BY THE VENDOR, SIGNAL EIC, AND CONSTRUCTION EIC BEFORE INSTALLATION.

SIGNAL 02-26-38
NEW MAST ARM
TRAFFIC SIGNAL

20 0 20 40 60 80'
1" = 40'

AFFIX SEAL: ON: 8/28/2025

ALTERED BY: ON:

STATE OF NEW YORK
THOMAS N. RASTANI JR.
087842
LICENSED PROFESSIONAL ENGINEER

D265579

AS-BUILT REVISIONS
DESCRIPTION OF ALTERATIONS:

CITY OF ROME: BLACK RIVER BLVD. ART. RTE 46-S.H. 9383

COUNTY: ONEIDA REGION: 02

PIN 2806.52
RTE 46
UTILITY QUALITY LEVEL D

BRIDGES

CULVERTS

ALL DIMENSIONS IN ft UNLESS OTHERWISE NOTED

TRAFFIC SIGNAL PLAN

CONTRACT NUMBER D265579

DRAWING NO. TSP-01
SHEET NO. 34

IT IS A VIOLATION OF LAW FOR ANY PERSON, UNLESS THEY ARE ACTING UNDER THE DIRECTION OF A LICENSED PROFESSIONAL ENGINEER, ARCHITECT, LANDSCAPE ARCHITECT, OR LAND SURVEYOR, TO ALTER AN ITEM IN ANY WAY. IF AN ITEM BEARING THE STAMP OF A LICENSED PROFESSIONAL IS ALTERED, THE ALTERING ENGINEER, ARCHITECT, LANDSCAPE ARCHITECT, OR LAND SURVEYOR SHALL STAMP THE DOCUMENT AND INCLUDE THE NOTATION "ALTERED BY" FOLLOWED BY THEIR SIGNATURE, THE DATE OF SUCH ALTERATION, AND A SPECIFIC DESCRIPTION OF THE ALTERATION.

NEW YORK STATE Department of Transportation

PROJECT MANAGER THOMAS N. RASTANI JR.
CHECK MIKE P. JONES
DRAFTING ADAM P. KLOSNER
CHECK MIKE P. JONES
DESIGN ADAM P. KLOSNER
JOB MANAGER THOMAS N. RASTANI JR.
DESIGN SUPERVISOR DAVID P. FACCHINI

FILE NAME = 280652_CPH_TSP_01.dgn
DATE/TIME = 27-AUG-2025 17:40
USER = RFitzgerald1

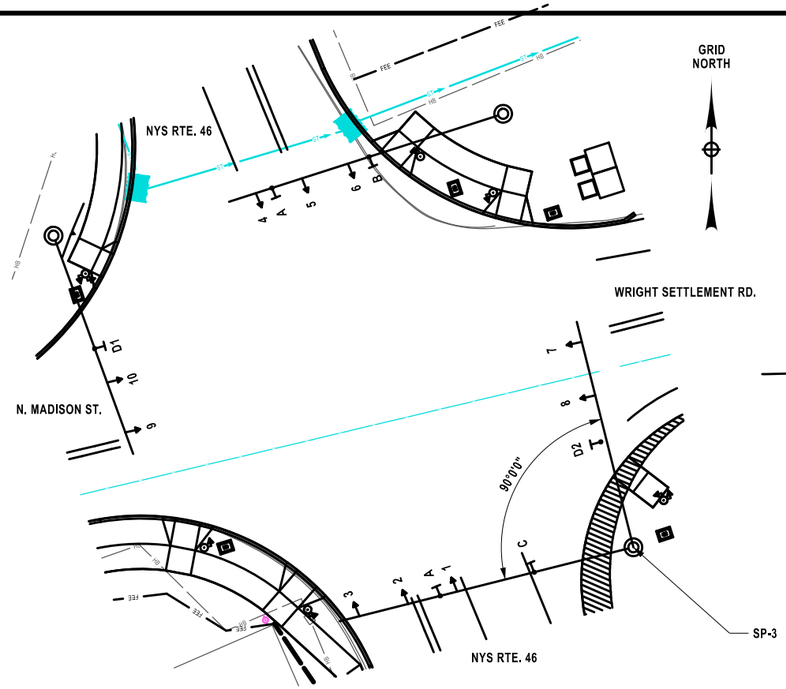

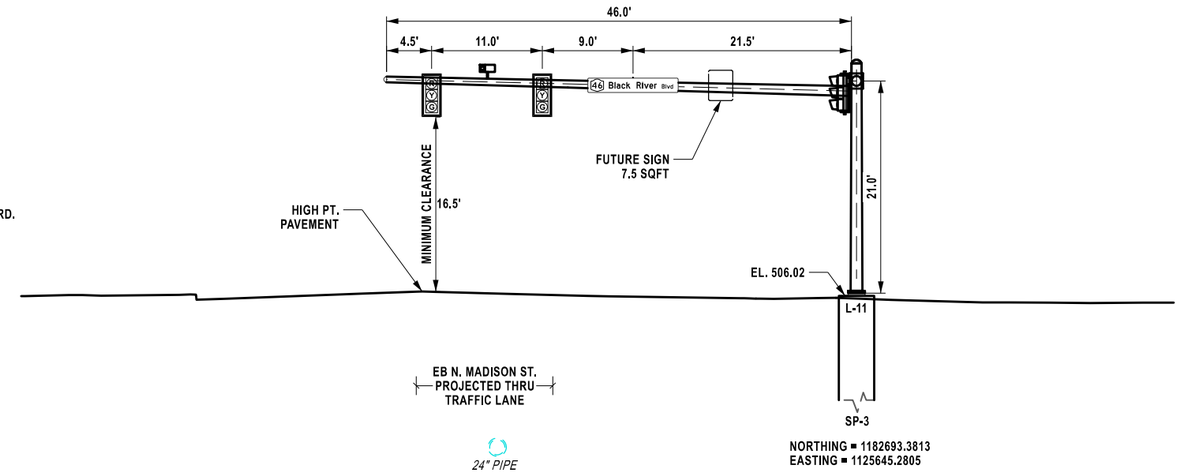

SP-3 SECONDARY ARM
DUAL MAST ARM TRAFFIC SIGNAL POLE
LOOKING EASTBOUND ON N. MADISON ST.

SIGNAL NO. 02-26-38
ITEM 680.632146
ROUTE 46 / N. MADISION ST. / WRIGHT SETTLEMENT RD.
NOT TO SCALE

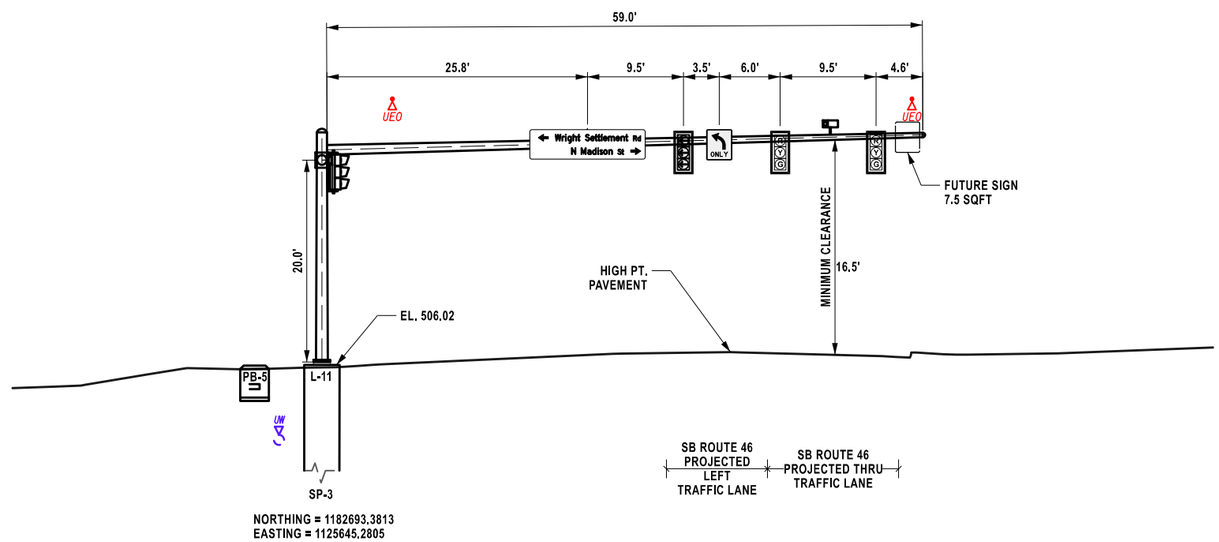

SP-3 PRIMARY ARM
DUAL MAST ARM TRAFFIC SIGNAL POLE
LOOKING SOUTHBOUND ON ROUTE 46

LEGEND
HYBRID DETECTION CAMERA

NOTES:
1. PROFILES CUT ALONG MAST ARM SHOW APPROXIMATE UTILITIES.
2. APPROXIMATE SIGNAL HEAD, SIGNAGE AND CAMERA LOCATIONS SHOWN, PLACEMENT TO BE DETERMINED IN THE FIELD
3. ALL POLES AND FOUNDATIONS DESIGNED FOR ONE EXTRA SIGN WITH AN AREA UP TO 7.5 SF ON ALL MAST ARMS.

AFFIX SEAL: ON: 8/28/2025

ALTERED BY: ON:

STATE OF NEW YORK · THOMAS N. RASTANI JR. · 087842 · LICENSED PROFESSIONAL ENGINEER

D265579

AS-BUILT REVISIONS
DESCRIPTION OF ALTERATIONS:

CITY OF ROME: BLACK RIVER BLVD. ART. RTE 46-S.H. 9383

COUNTY: ONEIDA REGION: 02

PIN 2806.52
RTE 46
UTILITY QUALITY LEVEL D

BRIDGES

CULVERTS

ALL DIMENSIONS IN ft UNLESS OTHERWISE NOTED

TRAFFIC SIGNAL PLAN

CONTRACT NUMBER D265579

DRAWING NO. TSP-02
SHEET NO. 35

IT IS A VIOLATION OF LAW FOR ANY PERSON, UNLESS THEY ARE ACTING UNDER THE DIRECTION OF A LICENSED PROFESSIONAL ENGINEER, ARCHITECT, LANDSCAPE ARCHITECT, OR LAND SURVEYOR, TO ALTER AN ITEM IN ANY WAY. IF AN ITEM BEARING THE STAMP OF A LICENSED PROFESSIONAL IS ALTERED, THE ALTERING ENGINEER, ARCHITECT, LANDSCAPE ARCHITECT, OR LAND SURVEYOR SHALL STAMP THE DOCUMENT AND INCLUDE THE NOTATION "ALTERED BY" FOLLOWED BY THEIR SIGNATURE, THE DATE OF SUCH ALTERATION, AND A SPECIFIC DESCRIPTION OF THE ALTERATION.

NEW YORK STATE Department of Transportation

PROJECT MANAGER THOMAS N. RASTANI JR.
CHECK MIKE P. JONES
DRAFTING ADAM P. KLOSNER
CHECK MIKE P. JONES
DESIGN ADAM P. KLOSNER
JOB MANAGER THOMAS N. RASTANI JR.
DESIGN SUPERVISOR DAVID P. FACCHINI

FILE NAME = 280652_CPH_TSP_02.dgn
DATE/TIME = 27-AUG-2025 17:16
USER = RFitzgerald1

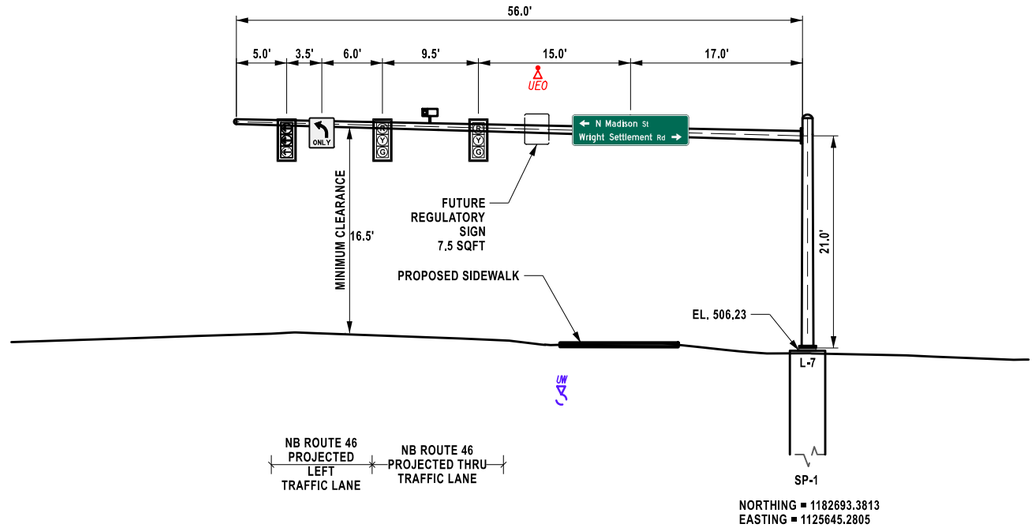

SIGNAL NO. 02-26-38
ITEM 680.622156 (SP-1)
ITEM 680.621845 (SP-2)
ROUTE 46 / N. MADISION ST. / WRIGHT SETTLEMENT RD.
NOT TO SCALE

SP-1
MAST ARM TRAFFIC SIGNAL POLE
LOOKING NORTHBOUND ON ROUTE 46

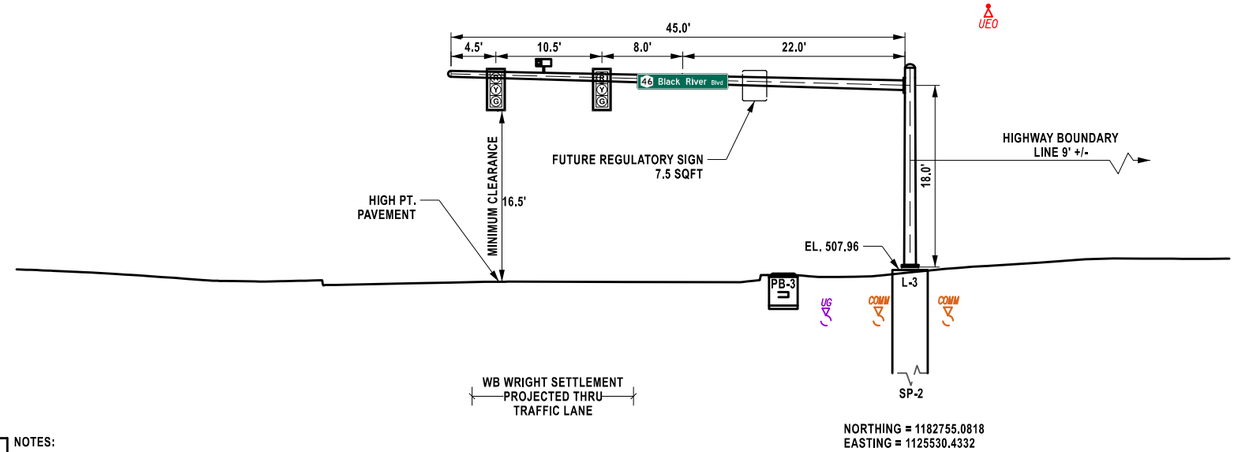

SP-2
MAST ARM TRAFFIC SIGNAL POLE
LOOKING WESTBOUND ON WRIGHT SETTLEMENT RD.

LEGEND
HYBRID DETECTION CAMERA

NOTES:
1. PROFILES CUT ALONG MAST ARM SHOW APPROXIMATE UTILITIES.
2. APPROXIMATE SIGNAL HEAD, SIGNAGE AND CAMERA LOCATIONS SHOWN, PLACEMENT TO BE DETERMINED IN THE FIELD
3. ALL POLES AND FOUNDATIONS DESIGNED FOR ONE EXTRA SIGN WITH AN AREA UP TO 7.5 SF ON ALL MAST ARMS.

AFFIX SEAL: ON: 8/28/2025

STATE OF NEW YORK
THOMAS N. RASTANI JR.
087842
LICENSED PROFESSIONAL ENGINEER

D265579

ALTERED BY:
ON:

AS-BUILT REVISIONS
DESCRIPTION OF ALTERATIONS:

CITY OF ROME: BLACK RIVER BLVD. ART. RTE 46-S.H. 9383

COUNTY: ONEIDA REGION: 02

PIN 2806.52
RTE 46
UTILITY QUALITY LEVEL D

BRIDGES

CULVERTS

ALL DIMENSIONS IN ft UNLESS OTHERWISE NOTED

TRAFFIC SIGNAL PLAN

CONTRACT NUMBER
D265579

DRAWING NO. TSP-03
SHEET NO. 36

IT IS A VIOLATION OF LAW FOR ANY PERSON, UNLESS THEY ARE ACTING UNDER THE DIRECTION OF A LICENSED PROFESSIONAL ENGINEER, ARCHITECT, LANDSCAPE ARCHITECT, OR LAND SURVEYOR, TO ALTER AN ITEM IN ANY WAY. IF AN ITEM BEARING THE STAMP OF A LICENSED PROFESSIONAL IS ALTERED, THE ALTERING ENGINEER, ARCHITECT, LANDSCAPE ARCHITECT, OR LAND SURVEYOR SHALL STAMP THE DOCUMENT AND INCLUDE THE NOTATION "ALTERED BY" FOLLOWED BY THEIR SIGNATURE, THE DATE OF SUCH ALTERATION, AND A SPECIFIC DESCRIPTION OF THE ALTERATION.

NEW YORK STATE Department of Transportation

PROJECT MANAGER THOMAS N. RASTANI JR. CHECK MIKE P. JONES DRAFTING ADAM P. KLOSNER CHECK MIKE P. JONES DESIGN ADAM P. KLOSNER JOB MANAGER THOMAS N. RASTANI JR. DESIGN SUPERVISOR DAVID P. FACCHINI

FILE NAME = 280652_CPH_TSP_03.dgn
DATE/TIME = 27-AUG-2025 17:13
USER = RFitzgerald1

ESTIMATE OF QUANTITIES - SIGNAL 02-26-38			
ITEM NUMBER	DESCRIPTION	UNIT	ESTIMATED QUANTITIES
203.98080015	HANDLING AND DISPOSAL OF PETROLEUM-CONTAMINATED WATER	GAL	150.0
205.0201	SEGREGATION AND STORAGE OF CONTAMINATED SOIL	LS	1
205.03	FIELD ORGANIC VAPOR MONITORING OF CONTAMINATED SOIL	HR	6
205.050201	DISPOSAL OF CONTAMINATED NON-HAZARDOUS WASTE SOIL	TON	12.0
206.03	CONDUIT EXCAVATION AND BACKFILL INCLUDING SURFACE RESTORATION	LF	625
206.05	TEST PIT EXCAVATION	EA	3
619.1613	MAINTAIN TRAFFIC SIGNAL EQUIPMENT (REQUIRMENT C)	INTM	20
645.61	OVERHEAD SIGN PANEL	SF	96
670.42110002	LIGHTING METER CABINET WITH ALL COMPONENTS	EA	1
680.05031002	MULTI-SENSOR DETECTION SYSTEM - MULTI SENSOR DETECTOR (MSD) (4 CAMERA SYSTEM & BRACKETS)	EA	1
680.05033002	MULTI-SENSOR DETECTION SYSTEM - CONTROL UNIT - SHELF MOUNT UNIT	EA	1
680.11131014	PEDESTRIAN SIGNAL POLE ASSEMBLY WITH CONCRETE FOUNDATION (ALL WORK INCLUDED) POLI, 2 SECT, TOP MTN, ALU. 1 FACE 10 FT	EA	4
680.11141014	PEDESTRIAN SIGNAL POLE ASSEMBLY WITH CONCRETE FOUNDATION (ALL WORK INCLUDED) POLI, 2 SECT, TOP MTN, ALU. 2 FACE 10 FT	EA	2
680.5001	POLE EXCAVATION AND CONCRETE FOUNDATION	CY	9
680.5002	CONCRETE BASE FOR CONTROLLER CABINET	EA	1
680.5003	CONCRETE WORK PAD (5FT X 5FT X 4IN)	EA	2
680.510501	PULLBOX-RECTANGULAR, 26X18 INCH, REINFORCED CONCRETE	EA	5
680.520106	CONDUIT, METAL STEEL, ZINC COATED, 2"	LF	325
680.520108	CONDUIT, METAL STEEL, ZINC COATED, 3"	LF	775
680.622156	TRAFFIC SIGNAL POLE, MAST ARM, 21 FEET MOUNTING HEIGHT 56 FEET ARM LENGTH	EA	1
680.621845	TRAFFIC SIGNAL POLE, MAST ARM, 18 FEET MOUNTING HEIGHT 45 FEET ARM LENGTH	EA	1
680.632146	TRAFFIC SIGNAL POLE, DUAL MAST ARM, 21 FEET MOUNTING HEIGHT 46 FEET ARM LENGTH	EA	1
680.730514	SIGNAL CABLE 5 CONDUCTOR, 14 AWG	LF	3100
680.730714	SIGNAL CABLE 7 CONDUCTOR, 14 AWG	LF	400
680.78000001	MODIFY AND REMOVE TRAFFIC SIGNAL EQUIPMENT	LS	1
680.80	BATTERY BACKUP SYSTEM FOR TRAFFIC SIGNALS	EA	1
680.80324515	INSTALL MICROCOMPUTER CABINET	EA	1
680.80324708	MICROCOMPUTER CABINET BASE (ALUMINUM)	EA	1
680.810308	INSTALL BALL/ARROW LED TRAFFIC SIGNAL MODULE	EA	30
680.810601	TRAFFIC SIGNAL SECTION - POLYCARBONATE, TYPE I, 12 INCH	EA	30
680.81210004	TRAFFIC SIGNAL BRACKET ASSEMBLY - ONE WAY, MAST ARM MOUNT	EA	10
680.8199	TRAFFIC SIGNAL BACKPLATES WITH YELLOW REFLECTIVE TAPE	EA	10
680.8207	OVERHEAD SIGN ASSEMBLY, TYPE G	EA	2
680.950306	ELECTRICAL SERVICE CABLE 3 WIRE 6 GAUGE	LF	210

PHASE DIAGRAM
SIGNAL 02-26-38

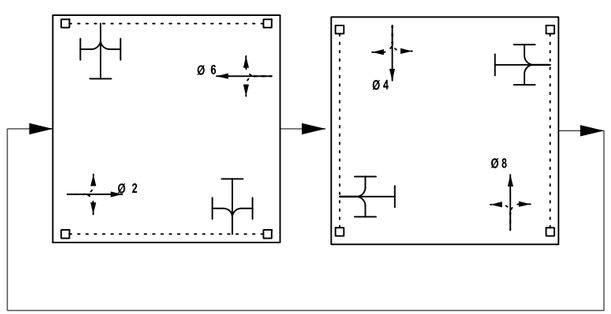

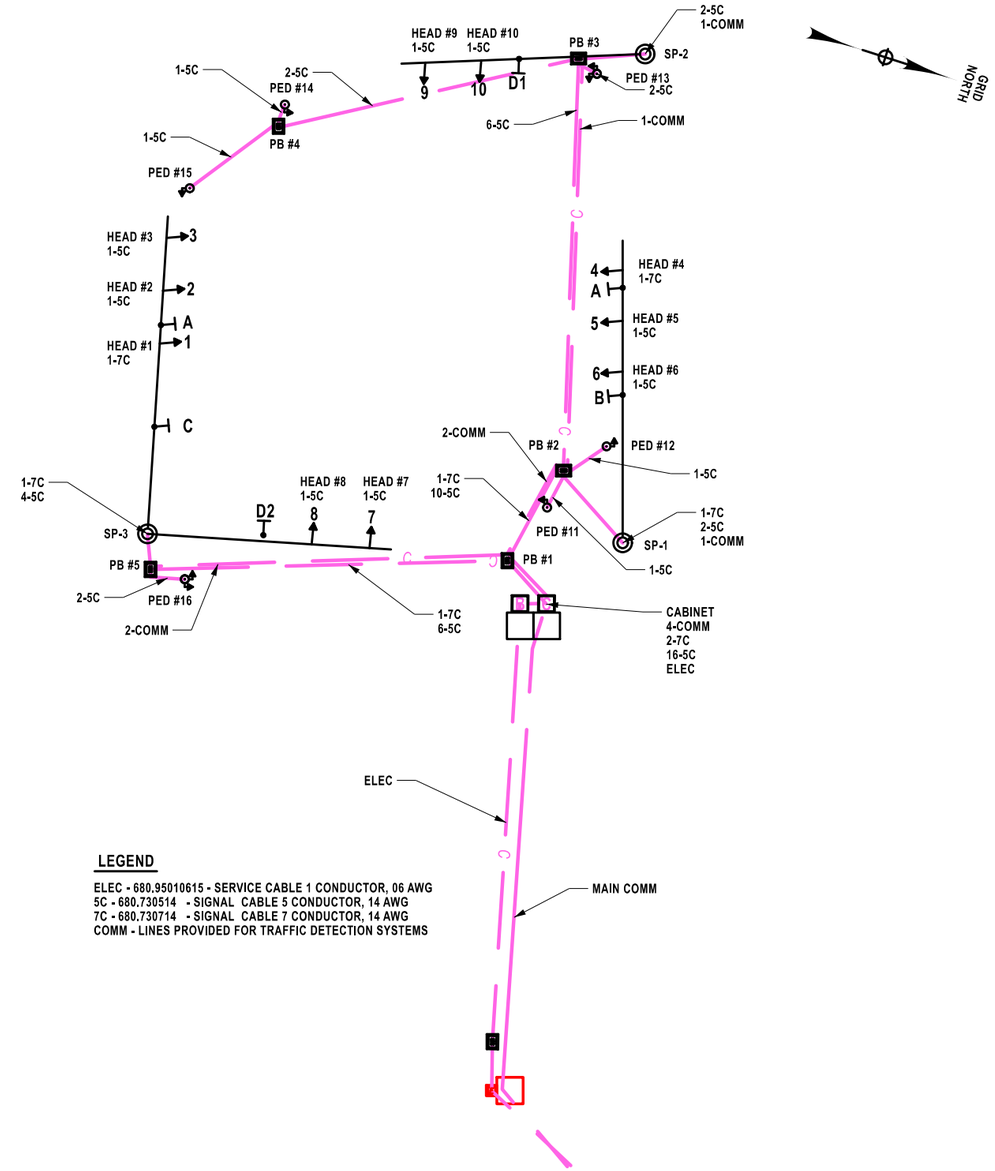

LEGEND

ELEC - 680.95010615 - SERVICE CABLE 1 CONDUCTOR, 06 AWG
5C - 680.730514 - SIGNAL CABLE 5 CONDUCTOR, 14 AWG
7C - 680.730714 - SIGNAL CABLE 7 CONDUCTOR, 14 AWG
COMM - LINES PROVIDED FOR TRAFFIC DETECTION SYSTEMS

AFFIX SEAL: ON: 8/28/2025

ALTERED BY: ON:

STATE OF NEW YORK · THOMAS N. RASTANI JR · 087842 · LICENSED PROFESSIONAL ENGINEER

D265579

AS-BUILT REVISIONS
DESCRIPTION OF ALTERATIONS:

CITY OF ROME: BLACK RIVER BLVD. ART. RTE 46-S.H. 9383

COUNTY: ONEIDA REGION: 02

PIN 2806.52
RTE 46
UTILITY QUALITY LEVEL D

BRIDGES

CULVERTS

ALL DIMENSIONS IN ft UNLESS OTHERWISE NOTED

TRAFFIC SIGNAL PLAN

CONTRACT NUMBER D265579

DRAWING NO. TSP-04

SHEET NO. 37

IT IS A VIOLATION OF LAW FOR ANY PERSON, UNLESS THEY ARE ACTING UNDER THE DIRECTION OF A LICENSED PROFESSIONAL ENGINEER, ARCHITECT, LANDSCAPE ARCHITECT, OR LAND SURVEYOR, TO ALTER AN ITEM IN ANY WAY. IF AN ITEM BEARING THE STAMP OF A LICENSED PROFESSIONAL IS ALTERED, THE ALTERING ENGINEER, ARCHITECT, LANDSCAPE ARCHITECT, OR LAND SURVEYOR SHALL STAMP THE DOCUMENT AND INCLUDE THE NOTATION "ALTERED BY" FOLLOWED BY THEIR SIGNATURE, THE DATE OF SUCH ALTERATION, AND A SPECIFIC DESCRIPTION OF THE ALTERATION.

NEW YORK STATE Department of Transportation

PROJECT MANAGER THOMAS N. RASTANI JR.
CHECK MIKE P. JONES
DRAFTING ADAM P. KLOSNER
CHECK MIKE P. JONES
DESIGN ADAM P. KLOSNER
JOB MANAGER THOMAS N. RASTANI JR.
DESIGN SUPERVISOR DAVID P. FACCHINI

FILE NAME = 280652_CPH_TSP_04.dgn
DATE/TIME = 27-AUG-2025 17:24
USER = RFitzgerald1

SIG. 38, ONEIDA CO.			ROUTE 46 AT WRIGHT SETTLEMENT RD. - ROME - 02-26-38	
TABLE OF INPUT WIRING				
TERMINAL NUMBER	FUNCTION	DETECTOR NUMBER	DETECTOR TYPE	REMARKS
33A, 33B		33	6'x6'	RTE 46 NBR COUNT
34A, 34B		34	6'x6'	RTE 46 NBT COUNT
35A, 35B	Ø2	35	6'x40'	RTE 46 NBT PRESENCE
36A, 36B		36	6'x6'	RTE 46 NBL COUNT
37A, 37B	Ø2	37	6'x40'	RTE 46 NBL PRESENCE
38A, 38B		38	6'x6'	MADISON ST. EBR COUNT
39A, 39B		39	6'x6'	MADISON ST. EBT COUNT
40A, 40B	Ø4	40	6'x40'	MADISON ST. EB PRESENCE
41A, 41B		41	6'x6'	RTE 46 SBR COUNT
42A, 42B		42	6'x6'	RTE 46 SBT COUNT
43A, 43B	Ø6	43	6'x40'	RTE 46 SBT PRESENCE
44A, 44B		44	6'x6'	RTE 46 SBL COUNT
45A, 45B	Ø6	45	6'x40'	RTE 46 SBL PRESENCE
46A, 46B		46	6'x6'	WRIGHT SETTLEMENT RD. WBR COUNT
47A, 47B		47	6'x6'	WRIGHT SETTLEMENT RD. WBT COUNT
48A, 48B	Ø8	48	6'x40'	WRIGHT SETTLEMENT RD. WB PRESENCE
49A, 49B		49		
50A, 50B		50		
51A, 51B		51		
52A, 52B		52		
53A, 53B		53	6'x6'	RTE 46 NB LONG RANGE COUNT
54A, 54B		54	6'x6'	MADISON ST. EB LONG RANGE COUNT
55A, 55B		55	6'x6'	RTE 46 SB LONG RANGE COUNT
56A, 56B		56	6'x6'	WRIGHT SETTLEMENT RD. WB LONG RANGE COUNT

SIG. 38, ONEIDA CO.			ROUTE 46 AT WRIGHT SETTLEMENT RD. - ROME - 02-26-38	
TABLE OF INPUT WIRING				
TERMINAL NUMBER	FUNCTION	DETECTOR NUMBER	DETECTOR TYPE	REMARKS
1A, 1B	Ø2	1	PED	PED HEAD 11, XING E/W, EASTSIDE NE CORNER
2A, 2B	Ø8	2	PED	PED HEAD 12, XING N/S, NORTHSIDE NE CORNER
3A, 3B	Ø8	3	PED	PED HEAD 13, XING N/S, NORTHSIDE NW CORNER
4A, 4B	Ø6	4	PED	PED HEAD 13, XING E/W, WESTSIDE NW CORNER
5A, 5B	Ø6	5	PED	PED HEAD 14, XING E/W, WESTSIDE SW CORNER
6A, 6B	Ø4	6	PED	PED HEAD 15, XING N/S, SOUTHSIDE SW CORNER
7A, 7B	Ø4	7	PED	PED HEAD 16, XING N/S, SOUTHSIDE SE CORNER
8A, 8B	Ø2	8	PED	PED HEAD 16, XING E/W, EASTSIDE SE CORNER

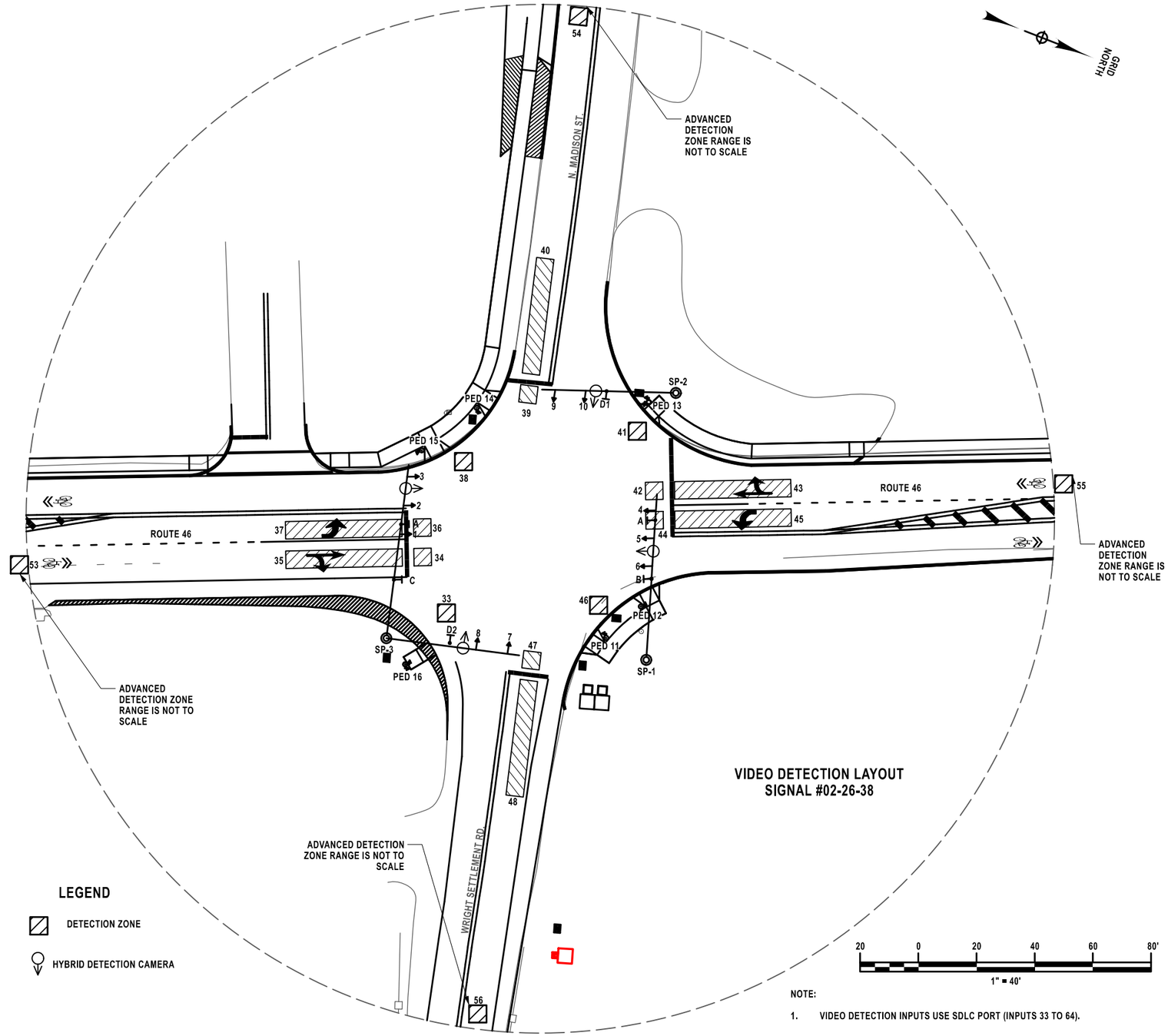

NOTE:

1. VIDEO DETECTION INPUTS USE SDLC PORT (INPUTS 33 TO 64).

AFFIX SEAL: ON: 8/28/2025

ALTERED BY: ON:

STATE OF NEW YORK · THOMAS N. RASTANI JR. · 087842 · LICENSED PROFESSIONAL ENGINEER

D265579

AS-BUILT REVISIONS
DESCRIPTION OF ALTERATIONS:

CITY OF ROME: BLACK RIVER BLVD. ART. RTE 46-S.H. 9383

COUNTY: ONEIDA REGION: 02

PIN 2806.52
RTE 46
UTILITY QUALITY LEVEL D

BRIDGES

CULVERTS

ALL DIMENSIONS IN ft UNLESS OTHERWISE NOTED

TRAFFIC SIGNAL PLAN

CONTRACT NUMBER D265579

DRAWING NO. TSP-05

SHEET NO. 38

IT IS A VIOLATION OF LAW FOR ANY PERSON, UNLESS THEY ARE ACTING UNDER THE DIRECTION OF A LICENSED PROFESSIONAL ENGINEER, ARCHITECT, LANDSCAPE ARCHITECT, OR LAND SURVEYOR, TO ALTER AN ITEM IN ANY WAY. IF AN ITEM BEARING THE STAMP OF A LICENSED PROFESSIONAL IS ALTERED, THE ALTERING ENGINEER, ARCHITECT, LANDSCAPE ARCHITECT, OR LAND SURVEYOR SHALL STAMP THE DOCUMENT AND INCLUDE THE NOTATION "ALTERED BY" FOLLOWED BY THEIR SIGNATURE, THE DATE OF SUCH ALTERATION, AND A SPECIFIC DESCRIPTION OF THE ALTERATION.

NEW YORK STATE Department of Transportation

PROJECT MANAGER THOMAS N. RASTANI JR.
CHECK MIKE P. JONES
DRAFTING ADAM P. KLOSNER
CHECK MIKE P. JONES
DESIGN ADAM P. KLOSNER
JOB MANAGER THOMAS N. RASTANI JR.
DESIGN SUPERVISOR DAVID P. FACCHINI

FILE NAME = 280652_CPH_TSP_05.dgn
DATE/TIME = 28-AUG-2025 07:32
USER = aklosner

SUPPLEMENTAL LANDSCAPE DEVELOPMENT SPECIFICATIONS ITEM 611 PLANT LIST

PLANT ITEM #	SYM	QTY	GENUS & SPECIES (& VARIETY, IF NECESSARY) COMMON NAME	SIZE	ROOTS	BALL DIA * (INCH)	PIT DIA (INCH)	SOURCE	REMARKS
611.0341	P.G.	1	**PICEA GLAUCA 'MONTROSE SPIRE'** MONTROSE SPIRE WHITE SPRUCE	4'-0" MIN. HT.	B & B	20"/12"	60"	NG	TREE SHALL BE STAKED. SEE BELOW FOR SPACING FROM VIBURNUM AND POTENTILLA.
611.0451	V.B.	3	**VIBURNUM DENTATUM 'BLUE MUFFIN'** BLUE MUFFIN VIBURNUM	3'-0" MIN. HT.	B & B	14"/9"	42"	NG	**MULTI-STEM** - 5 CANES MINIMUM . 36" O.C., 48" O.C. FROM POTENTILLA & 96" O.C. FROM PICEA. **SEE NOTE #2 BELOW.**
611.0422	P.O.	7	**PHYSOCARPUS OPULIFOLIUS 'LITTLE DEVIL'** LITTLE DEVIL NINEBARK	1'-3" MIN. HT.	C.G. #3	9"/5.75"	27"	NG	4 CANES MINIMUM. PLANTS SPACED 36" O.C. FROM ONE ANOTHER. **SEE NOTE #2 BELOW.**
611.0422	P.F.	23	**POTENTILLA FRUITICOSA 'GOLD DROP'** GOLD DROP POTENTILLA	1'-3" MIN. HT.	C.G. #3	9"/5.75"	27"	NG	4 CANES MINIMUM. PLANTS SPACED 36" O.C. FROM ONE ANOTHER, 48" O.C. FROM VIBURNUM & 96" O.C. FROM PICEA. **SEE NOTE #2 BELOW.**

KEY TO ABBREVIATIONS

DBH - DIAMETER BREAST HEIGHT (4'-6" ABOVE THE GROUND)
CAL. - CALIPER
DIA. - DIAMETER

NS - NATIVE SOIL
BR - BARE ROOT
B&B - BALLED AND BURLAPPED

FG - FIELD GROWN
CG - CONTAINER GROWN
NG - NURSERY GROWN

NOTES:

1) **EACH DELIVERY OF PLANT MATERIAL SHALL BE ACCOMPANIED BY AN INVOICE AND POSITIVE IDENTIFICATION OF SPECIES AND/OR HYBRID CLEARLY WRITTEN OUT FOR THE ENGINEERS RECORDS. A CURRENT CERTIFICATE OF NURSERY INSPECTION BY THE SUPPLIER'S GOVERNING AGRICULTURAL AND MARKETS AGENCY IS ALSO REQUIRED FOR EACH DELIVERY.**
2) **PLANTS SHALL BE PLANTED IN BED APPLICATION. MEANING, ENTIRE AREA OF BED WILL BE EXCAVATED AND FILLED WITH SPECIFIED SOIL, HAVE PERMEABLE WEED CONTROL LANDSCAPE FABRIC PLACED WITHIN BED, AND HAVE SPECIFIED MULCHED APPLIED TO AREA AT A DEPTH OF 3".**
3) **SEE LANDSCAPE PLANTING DETAILS (SHEETS 1 OF 2 AND 2 OF 2), 611-01, FOR PLANTING DETAILS.**
4) **FIRST NUMBER UNDER 'BALL DIAMETER' IS FOR BALL WIDTH, AND SECOND NUMBER IS FOR BALL DEPTH.**
5) **ITEM 610.1402 TOPSOIL - ROADSIDE SHALL BE USED TO BACKFILL ALL PLANT PITS AND IS INCLUDED IN BID PRICE FOR EACH PLANT ITEM.**

AFFIX SEAL: ON: 8/26/25

ALTERED BY: ON:

REGISTERED LANDSCAPE ARCHITECT ★ CHRISTINA M. GRAVELDING ★ 002858 ★ STATE OF NEW YORK

AS-BUILT REVISIONS
DESCRIPTION OF ALTERATIONS:

CITY OF ROME: BLACK RIVER BLVD. ART. RTE 46-S.H. 9383

COUNTY: ONEIDA REGION: 02

PIN 2806.52
RTE 46
UTILITY QUALITY LEVEL D

BRIDGES

CULVERTS

ALL DIMENSIONS IN ft UNLESS OTHERWISE NOTED

PLANT LIST

CONTRACT NUMBER D265579

DRAWING NO. LAT-01

SHEET NO. 39

IT IS A VIOLATION OF LAW FOR ANY PERSON, UNLESS THEY ARE ACTING UNDER THE DIRECTION OF A LICENSED PROFESSIONAL ENGINEER, ARCHITECT, LANDSCAPE ARCHITECT, OR LAND SURVEYOR, TO ALTER AN ITEM IN ANY WAY. IF AN ITEM BEARING THE STAMP OF A LICENSED PROFESSIONAL IS ALTERED, THE ALTERING ENGINEER, ARCHITECT, LANDSCAPE ARCHITECT, OR LAND SURVEYOR SHALL STAMP THE DOCUMENT AND INCLUDE THE NOTATION "ALTERED BY" FOLLOWED BY THEIR SIGNATURE, THE DATE OF SUCH ALTERATION, AND A SPECIFIC DESCRIPTION OF THE ALTERATION.

NEW YORK STATE Department of Transportation

PROJECT MANAGER THOMAS N. RASTANI JR. CHECK CHRISTINA GRAVELDING DRAFTING BOB HETZLER CHECK CHRISTINA GRAVELDING DESIGN BOB HETZLER CHECK CHRISTINA GRAVELDING JOB MANAGER THOMAS N. RASTANI JR. DESIGN SUPERVISOR DAVID P. FACCHINI

FILE NAME = 280562_cph_lat_01_plant list.dgn
DATE/TIME = 26-AUG-2025 09:03
USER = RFitzgerald1

610 & 611 PLANTING TABLE

	ITEM 610.1103 MULCH FOR PLANTING TYPE E - PINE NUGGETS (CY)	ITEM 610.1201 PERMEABLE WEED CONTROL LANDSCAPE FABRIC (SY)	ITEM 610.1402 TOPSOIL - ROADSIDE (CY)	ITEM 610.19 WATERING VEGETATION (1,000 GALLONS)	ITEM 611.0341 PLANTING - MAJOR CONIFEROUS TREES -4' HIGH (B&B) (EA)	ITEM 611.0422 PLANTING - DECIDUOUS SHRUBS - 15" HEIGHT/SPREAD (CG) (EA)	ITEM 611.0451 PLANTING - DECIDUOUS SHRUBS - 3"' HEIGHT/SPREAD (BB) (EA)
	1.6	18.7	2.3	1.4	1.0	30.0	3.0
TOTAL	1.6	18.7	2.3	1.4	1.0	30.0	3.0

610 & 611 PLANTING TABLE (CON'T)

	ITEM 611.19030024 POST-PLANTING CARE W/ REPLACEMENT - CONIFEROUS TREES (EA)	ITEM 611.19040024 - POST-PLANTING CARE W/ REPLACEMENT - DECIDUOUS SHRUBS (EA)
	1.0	33.0
TOTAL	1.0	33.0

PLANTING LOCATIONS

STATIONING	OFFSET	SIDE	PLANTINGS
J 0+00	APPROXIMATELY 35'	R	8 - ITEM 611.0422 POTENTILLA FRUITICOSA 'GOLD DROP'
J 0+50	APPROXIMATELY 55'	R	7 - ITEM 611.0422 PHYSOCARPUS OPULIFOLIUS 'LITTLE DEVIL'
J 0+75	APPROXIMATELY 40'	R	15 - ITEM 611.0422 POTENTILLA FRUITICOSA 'GOLD DROP 3 - ITEM 611.0451 VIBURNUM DENTATUM 'BLUE MUFFIN' 1 - ITEM 611.0341 PICEA GLAUCA 'MONTROSE SPIRE'

AFFIX SEAL: ON: 8/26/25

ALTERED BY: ON:

REGISTERED LANDSCAPE ARCHITECT CHRISTINA M. GRAVELDING 002858 STATE OF NEW YORK

AS-BUILT REVISIONS
DESCRIPTION OF ALTERATIONS:

CITY OF ROME: BLACK RIVER BLVD. ART. RTE 46-S.H. 9383

COUNTY: ONEIDA REGION: 02

PIN 2806.52
RTE 46
UTILITY QUALITY LEVEL D

BRIDGES

CULVERTS

ALL DIMENSIONS IN ft UNLESS OTHERWISE NOTED

LANDSCAPE TABLE

CONTRACT NUMBER D265579

DRAWING NO. LAT-02

SHEET NO. 40

IT IS A VIOLATION OF LAW FOR ANY PERSON, UNLESS THEY ARE ACTING UNDER THE DIRECTION OF A LICENSED PROFESSIONAL ENGINEER, ARCHITECT, LANDSCAPE ARCHITECT, OR LAND SURVEYOR, TO ALTER AN ITEM IN ANY WAY. IF AN ITEM BEARING THE STAMP OF A LICENSED PROFESSIONAL IS ALTERED, THE ALTERING ENGINEER, ARCHITECT, LANDSCAPE ARCHITECT, OR LAND SURVEYOR SHALL STAMP THE DOCUMENT AND INCLUDE THE NOTATION "ALTERED BY" FOLLOWED BY THEIR SIGNATURE, THE DATE OF SUCH ALTERATION, AND A SPECIFIC DESCRIPTION OF THE ALTERATION.

NEW YORK STATE Department of Transportation

DESIGN SUPERVISOR DAVID P. FACCHINI JOB MANAGER THOMAS N. RASTANI JR. DESIGN BOB HETZLER CHECK CHRISTINA GRAVELDING DRAFTING BOB HETZLER CHECK CHRISTINA GRAVELDING PROJECT MANAGER THOMAS N. RASTANI JR.

FILE NAME = 280652_cph_lat_02.dgn
DATE/TIME = 26-AUG-2025 09:05
USER = RFitzgerald1

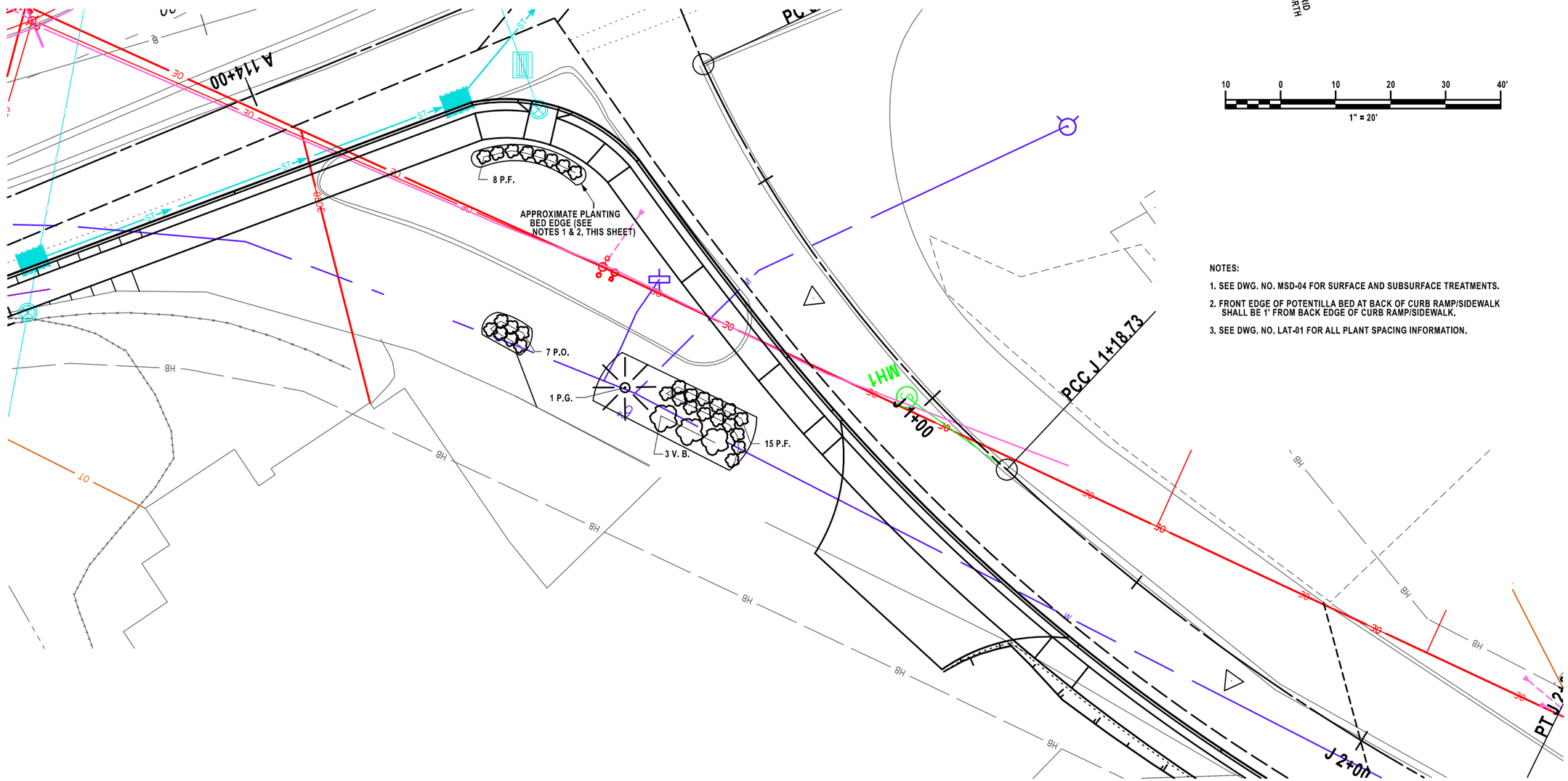

NOTES:

1. SEE DWG. NO. MSD-04 FOR SURFACE AND SUBSURFACE TREATMENTS.
2. FRONT EDGE OF POTENTILLA BED AT BACK OF CURB RAMP/SIDEWALK SHALL BE 1' FROM BACK EDGE OF CURB RAMP/SIDEWALK.
3. SEE DWG. NO. LAT-01 FOR ALL PLANT SPACING INFORMATION.

AFFIX SEAL: ON: 8/26/25	ALTERED BY: ON:

REGISTERED LANDSCAPE ARCHITECT ★ CHRISTINA M. GRAVELDING ★ 002858 ★ STATE OF NEW YORK ★

AS-BUILT REVISIONS
DESCRIPTION OF ALTERATIONS:

CITY OF ROME: BLACK RIVER BLVD. ART. RTE 46-S.H. 9383

COUNTY: ONEIDA REGION: 02

PIN 2806.52
RTE 46
UTILITY QUALITY LEVEL D

BRIDGES

CULVERTS

ALL DIMENSIONS IN ft UNLESS OTHERWISE NOTED

PLANTING PLAN

CONTRACT NUMBER D265579

DRAWING NO. LAP-01

SHEET NO. 41

IT IS A VIOLATION OF LAW FOR ANY PERSON, UNLESS THEY ARE ACTING UNDER THE DIRECTION OF A LICENSED PROFESSIONAL ENGINEER, ARCHITECT, LANDSCAPE ARCHITECT, OR LAND SURVEYOR, TO ALTER AN ITEM IN ANY WAY. IF AN ITEM BEARING THE STAMP OF A LICENSED PROFESSIONAL IS ALTERED, THE ALTERING ENGINEER, ARCHITECT, LANDSCAPE ARCHITECT, OR LAND SURVEYOR SHALL STAMP THE DOCUMENT AND INCLUDE THE NOTATION "ALTERED BY" FOLLOWED BY THEIR SIGNATURE, THE DATE OF SUCH ALTERATION, AND A SPECIFIC DESCRIPTION OF THE ALTERATION.

NEW YORK STATE Department of Transportation

DESIGN SUPERVISOR DAVID P. FACCHINI JOB MANAGER THOMAS N. RASTANI JR. DESIGN BOB HETZLER CHECK CHRISTINA GRAVELDING DRAFTING BOB HETZLER CHECK CHRISTINA GRAVELDING PROJECT MANAGER THOMAS N. RASTANI JR.

FILE NAME = 280652_cph_lap-01.dgn_Planting Plan
DATE/TIME = 26-AUG-2025 09:07
USER = RFitzgerald1

OVERHEAD UTILITY DISPOSITION TABLE

EP POLE NUMBER ON PLANS	DRAWING NUMBER	UTILITIES REAL POLE NUMBER	FACILITIES ON STRUCTURE							PROPOSED DESIGN CONFLICT WITH EXISTING UTILITIES	RELOCATION OR REMOVAL REQUIRED			WITHIN ROW		UNDERGROUND POWER RISER
			TRANS/ SUB T	DIST	SEC	LIGHT	FIRE	CABLE	TEL		YES	NO	HOLD	YES	NO	RELOCATION NEEDED (♦)
EP1	RP-3	NM 95		X	X	X		X	X			X		X		
EP2	RP-3	NM 88		X	X	X		X	X			X		X		
EP3	RP-3	NM 89		X	X	X		X	X			X		X		
EP4	RP-3	NM 96		X	X	X		X	X	IMPACT TO CONSTRUCTION (OVERHEAD LINES ONLY)	X			X		
EP5	RP-3	NM 90		X	X	X		X	X	IMPACT TO CONSTRUCTION (OVERHEAD LINES ONLY)	X			X		SECONDARY RISER
EP6	RP-3	NM 5		X	X	X		X	X			X		X		
EP7	RP-3	NM 91		X	X	XX		X	X	IMPACT TO CONSTRUCTION	X			X		
EP8	RP-3	NM 92		X	X			X	X	IMPACT TO CONSTRUCTION	X			X		
EP9	RP-3	NM 92-1			X			X	X	IMPACT TO CONSTRUCTION (OVERHEAD LINES ONLY)	X			X		
EP10	RP-3	NM 4		X	X	X		X	X			X		X		
EP11	RP-3	NM 4-1		X	X	X		X	X			X		X		
EP12	RP-3	NM 3-1		X	X	X		X	X	IMPACT TO CONSTRUCTION (OVERHEAD LINES ONLY)	X			X		
EP13	RP-3	NM 3-2		X	X	X		X	X			X			X	
EP14	RP-3	NM 3-3		X	X			X	X			X			X	
EP15	RP-3	NM 94		X	X	X		X	X	IMPACT TO CONSTRUCTION	X			X		
EP16	RP-3	NM 94-1			X					IMPACT TO CONSTRUCTION	X			X		
EP17	RP-3	NM 3-1			X	X						X		X		
EP18	RP-3	NM 3		X	X	X		X	X	IMPACT TO CONSTRUCTION (OVERHEAD LINES ONLY)	X			X		
EP19	RP-3	NM 95-1		X	X			X	X	IMPACT TO CONSTRUCTION (OVERHEAD LINES ONLY)	X			X		
EP20	RP-3	NM 95-2		X	X			X	X			X		X		SECONDARY RISER
EP21	RP-3	NM 95		X	X	X		X	X	IMPACT TO CONSTRUCTION	X			X		
EP22	RP-3	NM 96		X	X			X	X	IMPACT TO CONSTRUCTION	X			X		
EP23	RP-3	NM 97-1		X	X	X		X	X			X			X	
EP24	RP-3	NM 97 1/2		X	X			X	X	IMPACT TO CONSTRUCTION (OVERHEAD LINES ONLY)	X			X		
EP25	RP-3	NM 97		X	X			X	X	IMPACT TO CONSTRUCTION	X			X		SECONDARY RISER
EP26	RP-3	NM 97 1/2		X	X			X		IMPACT TO CONSTRUCTION (OVERHEAD LINES ONLY)	X			X		
EP27	RP-3	NM 98		X	X			X	X	IMPACT TO CONSTRUCTION (OVERHEAD LINES ONLY)	X			X		
EP28	RP-3	NM 98		X	X	X		X				X		X		SECONDARY RISER
EP29	RP-3	NM 99		X	X			X	X			X		X		
EP30	RP-3	NM 99		X	X							X		X		
EP31	RP-3	NM 100		X	X			X	X			X		X		SECONDARY RISER
EP32	RP-3	NM 101		X	X	X		X	X			X		X		

RELOCATE HIGHWAY LIGHTING ON WOODEN UTILITY POLES TABLE

DRAWING NUMBER	EXISTING LOCATION	PROPOSED LOCATION	ITEM 670.91000010 RELOCATE STREET LIGHTING BRACKET ARM WITH LUMINAIRE
			EACH
RP-3	EP1	NA	
RP-3	EP2	NA	
RP-3	EP3	NA	
RP-3	EP4	PP1	1
RP-3	EP5	NA	
RP-3	EP6	NA	
RP-3	EP7	PP2 AND PP7	2
RP-3	EP8	PP3	1
RP-3	EP9	NA	
RP-3	EP10	NA	
RP-3	EP11	NA	
RP-3	EP12	PP4	1
RP-3	EP13	NA	
RP-3	EP14	NA	
RP-3	EP15	PP5	1
RP-3	EP16	NA	
RP-3	EP17	NA	
RP-3	EP18	NA	
RP-3	EP19	NA	
RP-3	EP20	NA	
RP-3	EP21	NA	
RP-3	EP22	NA	
RP-3	EP23	NA	
RP-3	EP24	NA	
RP-3	EP25	PP9	1
RP-3	EP26	NA	
RP-3	EP27	NA	
RP-3	EP28	NA	
RP-3	EP29	NA	
RP-3	EP30	NA	
RP-3	EP31	NA	
RP-3	EP32	NA	
		TOTAL	7

UNDERGROUND UTILITY DISPOSITION TABLE

DRAWING NUMBER	APPROXIMATE LENGTH OF IMPACTED FACILITIES	SIDE	UTILITIES AFFECTED				PROPOSED DESIGN CONFLICT WITH EXISTING UTILITIES	RELOCATION REQUIRED	
			POWER	WATER	TEL	GAS		YES	NO
RP-3	120 FEET	RIGHT		X			IMPACT TO CONSTRUCTION	X	
RP-3	GAS VALVE 1	LEFT				X			X
RP-3	GAS VALVE 2	LEFT				X			X
RP-3	GAS VALVE 3	LEFT				X			X
RP-3	GAS VALVE 4	RIGHT				X			X

AFFIX SEAL: ON: 9/4/25

ALTERED BY: ON:

STATE OF NEW YORK · DAVID JEFFREY SADEKOSKI · 090796 · LICENSED PROFESSIONAL ENGINEER

AS-BUILT REVISIONS
DESCRIPTION OF ALTERATIONS:

CITY OF ROME: BLACK RIVER BLVD. ART. RTE 46-S.H. 9383

COUNTY: ONEIDA REGION: 02

PIN 2806.52
RTE 46
UTILITY QUALITY LEVEL C

BRIDGES

CULVERTS

ALL DIMENSIONS IN ft UNLESS OTHERWISE NOTED

UTILITY DISPOSITION TABLE

CONTRACT NUMBER D265579

DRAWING NO. UTT-01

SHEET NO. 42

IT IS A VIOLATION OF LAW FOR ANY PERSON, UNLESS THEY ARE ACTING UNDER THE DIRECTION OF A LICENSED PROFESSIONAL ENGINEER, ARCHITECT, LANDSCAPE ARCHITECT, OR LAND SURVEYOR, TO ALTER AN ITEM IN ANY WAY. IF AN ITEM BEARING THE STAMP OF A LICENSED PROFESSIONAL IS ALTERED, THE ALTERING ENGINEER, ARCHITECT, LANDSCAPE ARCHITECT, OR LAND SURVEYOR SHALL STAMP THE DOCUMENT AND INCLUDE THE NOTATION "ALTERED BY" FOLLOWED BY THEIR SIGNATURE, THE DATE OF SUCH ALTERATION, AND A SPECIFIC DESCRIPTION OF THE ALTERATION.

NEW YORK STATE Department of Transportation

PROJECT MANAGER THOMAS N. RASTANI JR.
CHECK DAVE SADEKOSKI
DRAFTING SCOTT STEARNS
CHECK DAVE SADEKOSKI
DESIGN ANTHONY LAMANNA
JOB MANAGER THOMAS N. RASTANI JR.
DESIGN SUPERVISOR DAVID P. FACCHINI
FILE NAME = 2806.52_CPH_UTT_01.dgn
DATE/TIME = 3-SEP-2025 14:47
USER = rsparacino

WATER NOTES

WN #	DESCRIPTION OF WORK	ITEM N0.	207.21 GEOTEXTILE SEPARATION	206.0201 TRENCH AND CULVERT EXCAVATION	304.12 SUBBASE COURSE, TYPE 2	404.1979 19 F9 BINDER COURSE ASPHALT, 70 SERIES	404.3779 37.5 F9 BASE COURSE ASPHALT, 70 SERIES COMPACTION	623.12 CRUSHED STONE (#2) (IN-PLACE MEASURE)	627.50140008 SAW CUTTING ASPHALT CONCRETE	552.17 SHIELDS AND SHORING	663.0106 (6 INCH) DUCTILE IRON CEMENT LINED WATER PIPE	663.07060108 FURNISH AND INSTALL 6 NPS INSERTING VALVE AND BOX	663.1806 (6 INCH) BOLTED, SLEEVE TYPE COUPLING	663.2001 (3 INCH TO 8 INCH) IRON WATER MAIN FITTINGS	LIST OF IRON WATER MAIN FITTINGS AND WEIGHTS USED IN ESTIMATE	663.2106 (6 INCH) WEDGE TYPE MECHANICAL RESTRAINT GLANDS (MEGA LUG)	663.42 REMOVE AND DISPOSE OF EXISTING WATER VALVE & VALVE BOX REMOVE AND DISPOSE
		PAY UNIT	SY	CY	CY	TON	TON	CY	FT	SF	FT	EA	EA	LB		EA	EA
1	CONTRACTOR TO REMOVE WATERVALVE #2.																1.0
2	CONTRACTOR SHALL FURNISH AND INSTALL (1) 6 INCH INSERTION VALVE.		2.8	5.6	0.9	0.9	1.0	2.2	20.0	120.0		1.0					
3	THE CONTRACTOR SHALL TIE INTO EXISTING 6 INCH WATERLINE, THE CONTRACTOR SHALL FURNISH AND INSTALL (1) 6" HYMAX COUPLING, 2 FEET OF 6" DUCTILE IRON WATER MAIN, (1) 6" MECHANICAL RESTRAINT GLAND (MEGA LUG), (1) 6" 45° FITTING, (1) 6" MECHANICAL RESTRAINT GLAND (MEGA LUG), 5 FEET OF 6" DUCTILE IRON WATER MAIN, (1) 6" MECHANICAL RESTRAINT GLAND (MEGA LUG), (1) 6" 45° FITTING, (1) 6" MECHANICAL RESTRAINT GLAND (MEGA LUG), 102 FEET OF 6" DUCTILE IRON WATER MAIN, (1) 6" MECHANICAL RESTRAINT GLAND (MEGA LUG), (1) 6" 45° FITTING, (1) 6" MECHANICAL RESTRAINT GLAND (MEGA LUG), 5 FEET OF 6" DUCTILE IRON WATER MAIN, (1) 6" MECHANICAL RESTRAINT GLAND (MEGA LUG), (1) 6" 45° FITTING, (1) 6" MECHANICAL RESTRAINT GLAND (MEGA LUG), 2 FEET OF 6" DUCTILE IRON WATER MAIN AND (1) 6" HYMAX COUPLING, TYING INTO THE EXISTING 6" MAIN.		40.3	85.8	1.3	1.3	1.4	67.1	24.0	1694.0	116.0		2.0	160.0	6" 45 40# 6" 45 40# 6" 45 40# 6" 45 40#	8.0	
		TOTAL:	43.1	91.3	2.3	2.3	2.3	69.3	44.0	1814.0	116.0	1.0	2.0	160.0		8.0	1.0

ALTER WATER VALVE TABLE

WATER VALVE NUMBER	DRAWING NUMBER	WATER VALVE	PROPOSED WORK	TO REMAIN	TO BE ADJUSTED	ITEM 663.33 ADJUST EXISTING VALVE BOX ELEVATION
WV1	RP-3	X	ADJUST WATER VALVE TO FINISH GRADE		X	1
WV2	RP-3	X	ADJUST WATER VALVE TO FINISH GRADE		X	1
WV3	RP-3	X		X		
WV4	RP-3	X	ADJUST WATER VALVE TO FINISH GRADE		X	1
				TOTAL		3

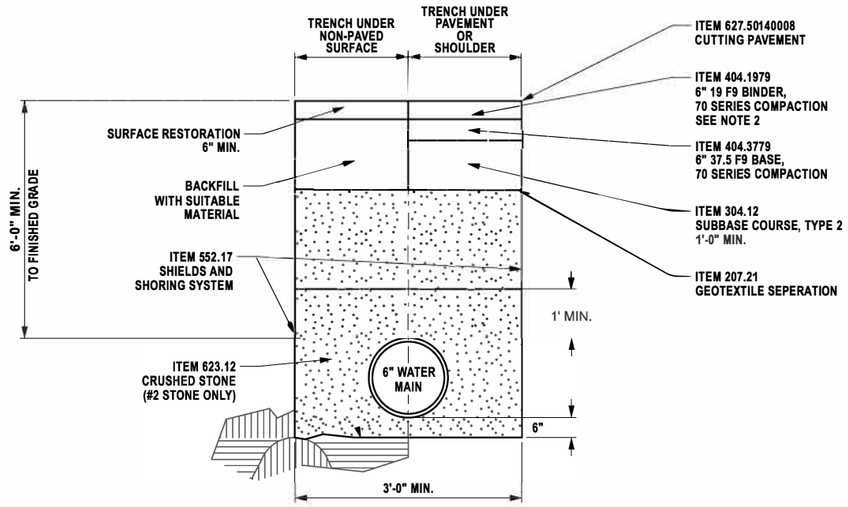

WATER MAIN TRENCH DETAIL

(NOT TO SCALE)

NOTES:
1) PAVEMENT DEPTHS VARY- MATCH EXTISTING DEPTHS
2) BINDER COURSE TO BE FLUSH WITH EXISTING PAVEMENT

ALTER MANHOLE TABLE

MANHOLE NUMBER	DRAWING NUMBER	MANHOLE	PROPOSED WORK	TO REMAIN	TO BE ADJUSTED	ITEM 655.05010010 RESETTING EXISTING SANITARY SEWER MANHOLE CASTINGS
MH 1	RP-3	X	ADJUST MANHOLE TO FINISH GRADE		X	1
MH 2	RP-3	X		X		
MH 3	RP-3	X		X		
MH 4	RP-3	X		X		
MH 5	RP-3	X		X		
MH 6	RP-3	X		X		
MH 7	RP-3	X		X		
MH 8	RP-3	X		X		
MH 9	RP-3	X		X		
				TOTAL		1

AFFIX SEAL: ON: 9/4/25

ALTERED BY: ON:

STATE OF NEW YORK · DAVID JEFFREY SADEKOSKI · 090796 · LICENSED PROFESSIONAL ENGINEER

AS-BUILT REVISIONS
DESCRIPTION OF ALTERATIONS:

CITY OF ROME: BLACK RIVER BLVD. ART. RTE 46-S.H. 9383

COUNTY: ONEIDA REGION: 02

PIN 2806.52
RTE 46
UTILITY QUALITY LEVEL C

BRIDGES

CULVERTS

ALL DIMENSIONS IN ft UNLESS OTHERWISE NOTED

UTILITY DISPOSITION TABLE

CONTRACT NUMBER D265579

DRAWING NO. UTT-02

SHEET NO. 43

IT IS A VIOLATION OF LAW FOR ANY PERSON, UNLESS THEY ARE ACTING UNDER THE DIRECTION OF A LICENSED PROFESSIONAL ENGINEER, ARCHITECT, LANDSCAPE ARCHITECT, OR LAND SURVEYOR, TO ALTER AN ITEM IN ANY WAY. IF AN ITEM BEARING THE STAMP OF A LICENSED PROFESSIONAL IS ALTERED, THE ALTERING ENGINEER, ARCHITECT, LANDSCAPE ARCHITECT, OR LAND SURVEYOR SHALL STAMP THE DOCUMENT AND INCLUDE THE NOTATION "ALTERED BY" FOLLOWED BY THEIR SIGNATURE, THE DATE OF SUCH ALTERATION, AND A SPECIFIC DESCRIPTION OF THE ALTERATION.

NEW YORK STATE Department of Transportation

PROJECT MANAGER THOMAS N. RASTANI JR.
CHECK DAVE SADEKOSKI
DRAFTING SCOTT STEARNS
CHECK DAVE SADEKOSKI
DESIGN ANTHONY LAMANNA
JOB MANAGER THOMAS N. RASTANI JR.
DESIGN SUPERVISOR DAVID P. FACCHINI
FILE NAME = 2806.52_CPH_UTT_02.dgn
DATE/TIME = 3-SEP-2025 14:51
USER = rsparacino